Q110228

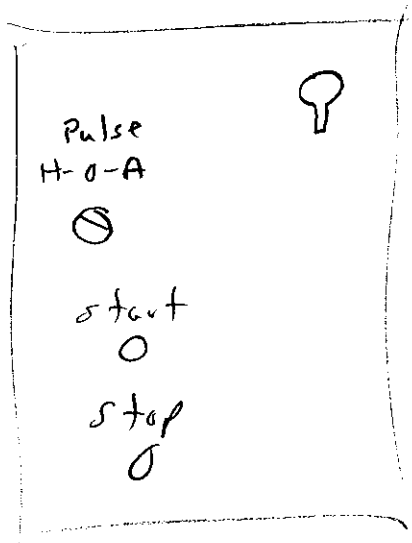
Pulse
H-O-A
start
stop

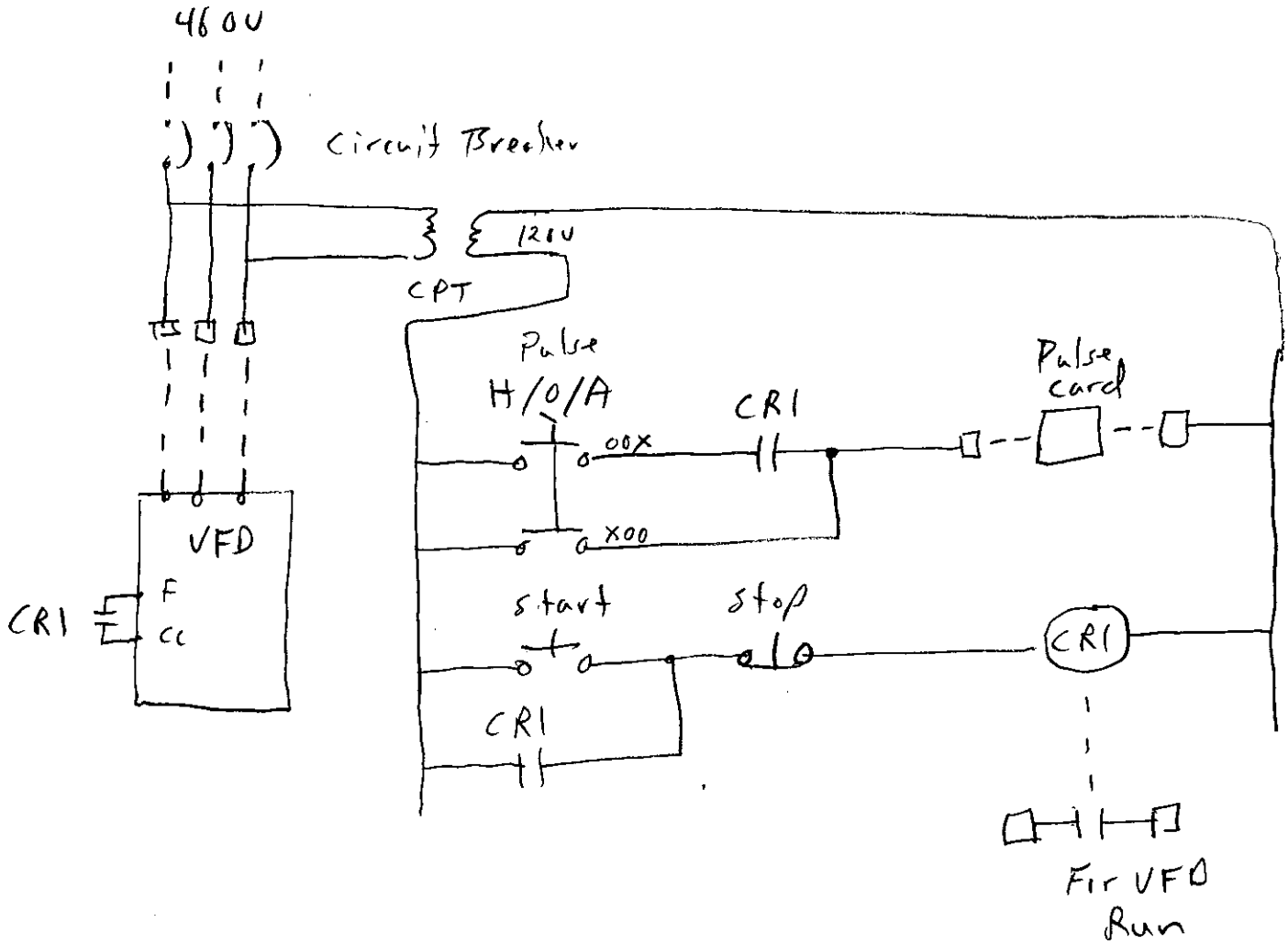
460V
Circuit Breaker
120V
CPT
Pulse
H/O/A
CR1
00X
X00
Pulse card
VFD
F
CC
CR1
start
stop
CR1
CR1
Fir VFD
Run