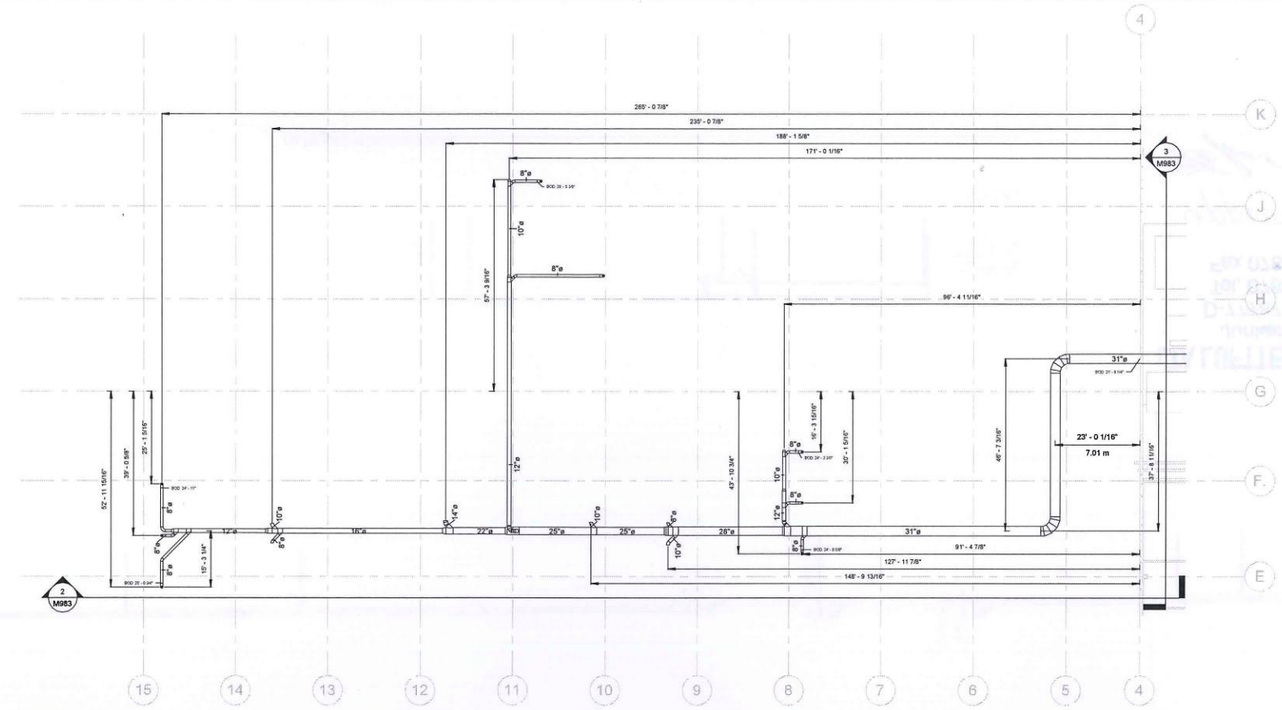

1 Exhaust Duct Systems Drilling
1/16" = 1'-0"

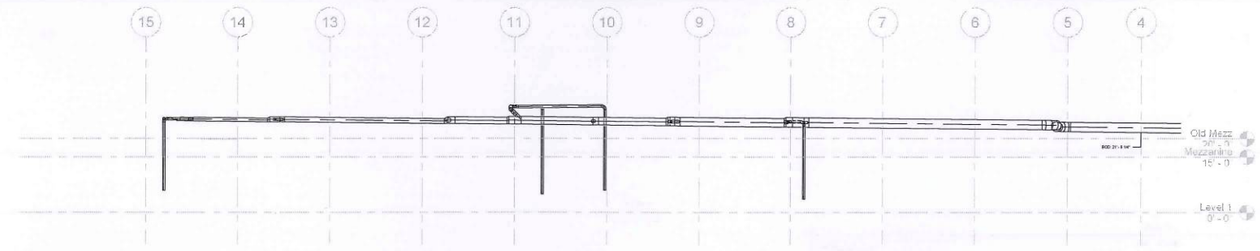

2 Exhaust Duct Drilling Section 1
1/16" = 1'-0"

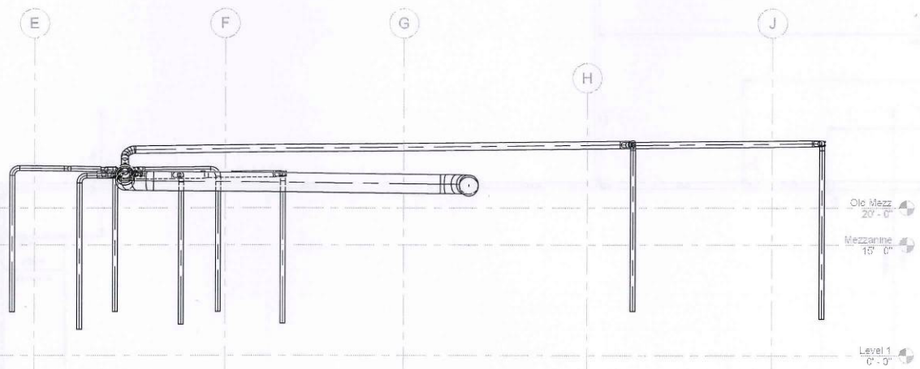

3 Exhaust Duct Drilling Section 2
1/8" = 1'-0"

LTA LUFTTECHNIK GMBH
Junkerstraße 2
D-77787 Nordrach
Tel. 07836/84245
Fax 07836/84308

approved

NOTES:

- DRILLING SYSTEM HAS SLOPE OF 1%
- ALL ECENTRIC REDUCERS
- ELEVATION MARKERS SERVE AS A REFERENCE ONLY, DUCT ELEVTIONS SHOULD BE CALCULATED BASED ON SLOPE FROM WALL OPENINGS AT CL4

RJ MECHANICAL, INC.
3153 Bellwood Drive
Birmingham, Alabama 35243
Phone: 205.968.0991 Fax: 205.968.3424

#	Date	Revision

FEUER POWERTRAIN
Tunica, Mississippi
Exhaust Duct - Drilling

JOB NUMBER:	Project Number
SCALE:	As indicated
DATE:	Issue Date
DESIGN:	Designer
DRAWN:	Author
CHECKED:	Checker

DRAWING NUMBER
M983