Carteret Community College
Fan Discharge Duct

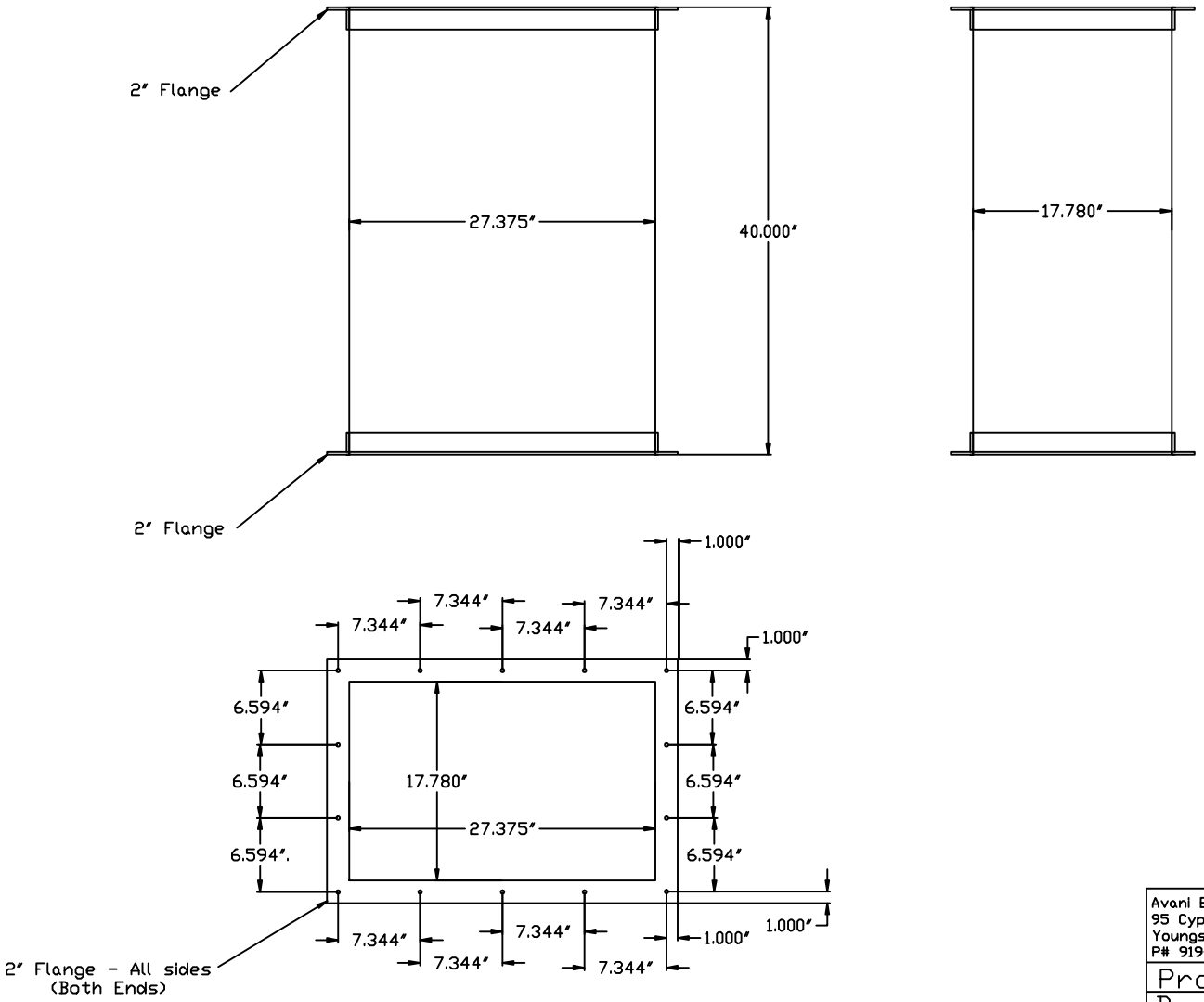

SO# 19678

Avani Environmental Intl.
95 Cypress Drive
Youngsville, NC 27596
P# 919-570-2862 F# 919-570-2863

Avani

Project: Carteret Comm. College	
Drawing: Fan Discharge Duct	
Date: 4/4/13	Drawn by: WWB
Sheet No: 1	Rev.: 0