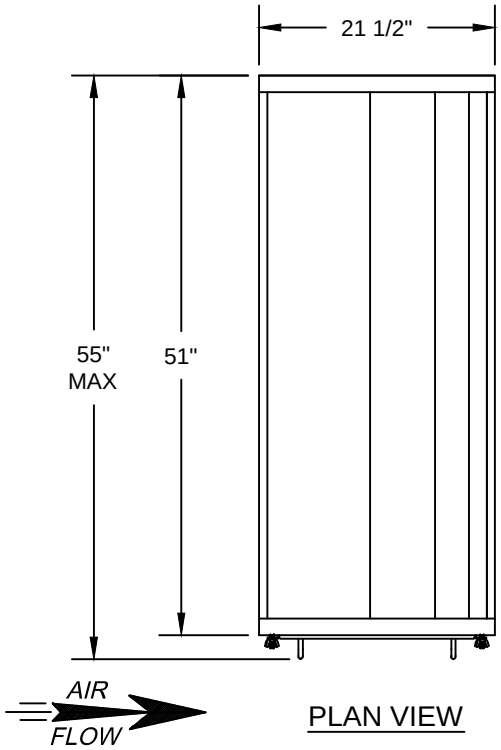

PLAN VIEW

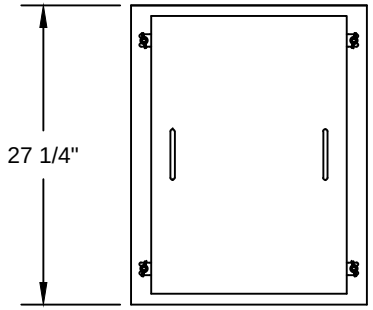

ACCESS VIEW

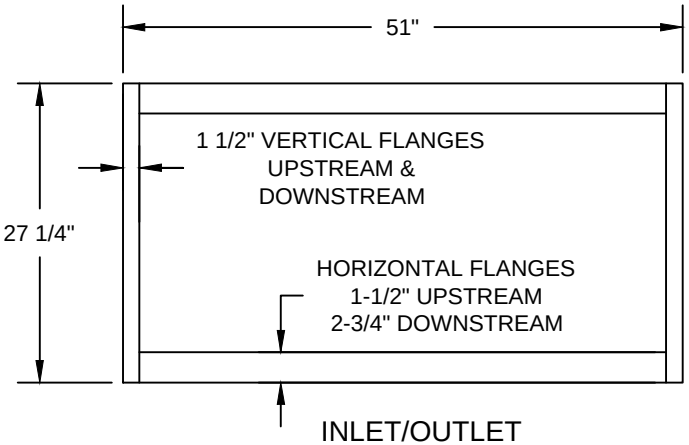

INLET/OUTLET
FLANGE CONNECTION

GENERAL NOTES

1. ONE (1) UNIT REQUIRED, SHOWN AS RIGHT HAND ACCESS.
2. CONSTRUCTION: THE UNIT IS INTERMITTENTLY WELDED AND CAULKED WITH AN RTV SEALANT.
3. MATERIAL: THE UNIT SHALL BE MANUFACTURED FROM 12 GA. AND 14 GA. GALVANIZED STEEL MATERIAL.
4. WING NUTS AND STUDS SHALL BE USED TO RETAIN DOORS. A NEOPRENE GASKET SHALL SEAL THE DOOR EDGES TO THE ENCLOSURE.
5. UNIT COMES EQUIPPED WITH A REMOVABLE LOCKING TRAY MECHANISM FOR GASKET SEAL FILTERS.
6. ALL HEPA FILTERS SHALL SEAL ON THE DOWNSTREAM SIDE OF THE UNIT.
7. THE SYSTEM IS DESIGNED TO ACCOMMODATE THE FOLLOWING FILTERS:
   TWO (2) 24x24x11-1/2" ACTUAL SIZE FINAL FILTERS

APPROVAL PRINT

- ☐ APPROVED
- ☐ APPROVED AS NOTED
- ☐ REVISE AND RESUBMIT

SIGNATURE: _____

DATE: _____

A.C.T.
DUST COLLECTORS
Air Cleaning Technology, Inc.
13310 Industrial Park Blvd. Suite 195 – Plymouth, MN 55441

REV.	DRAWN BY DATE	DESCRIPTION:	APPR. BY DATE

UNLESS OTHERWISE SPECIFIED
- ALL DIMENSIONS ARE IN INCHES
- TOLERANCES ARE: FRACTION: ±1/8" DECIMAL: ±.125" ANGULAR: ±1°

DRAWN BY: HJH	TITLE: 10H x 20W GASKET SEAL HEPA SIDE ACCESS			
DATE: 06/10/2015				
APPROVED BY: R&D	CONTROL NO.			DWG SCALE: NTS
DATE: 06/10/2015	DRAWING NO.: 15-166	SHEET 1	OF 1	REV. -

DIMSCALE .16 TEXT HEIGHT .15