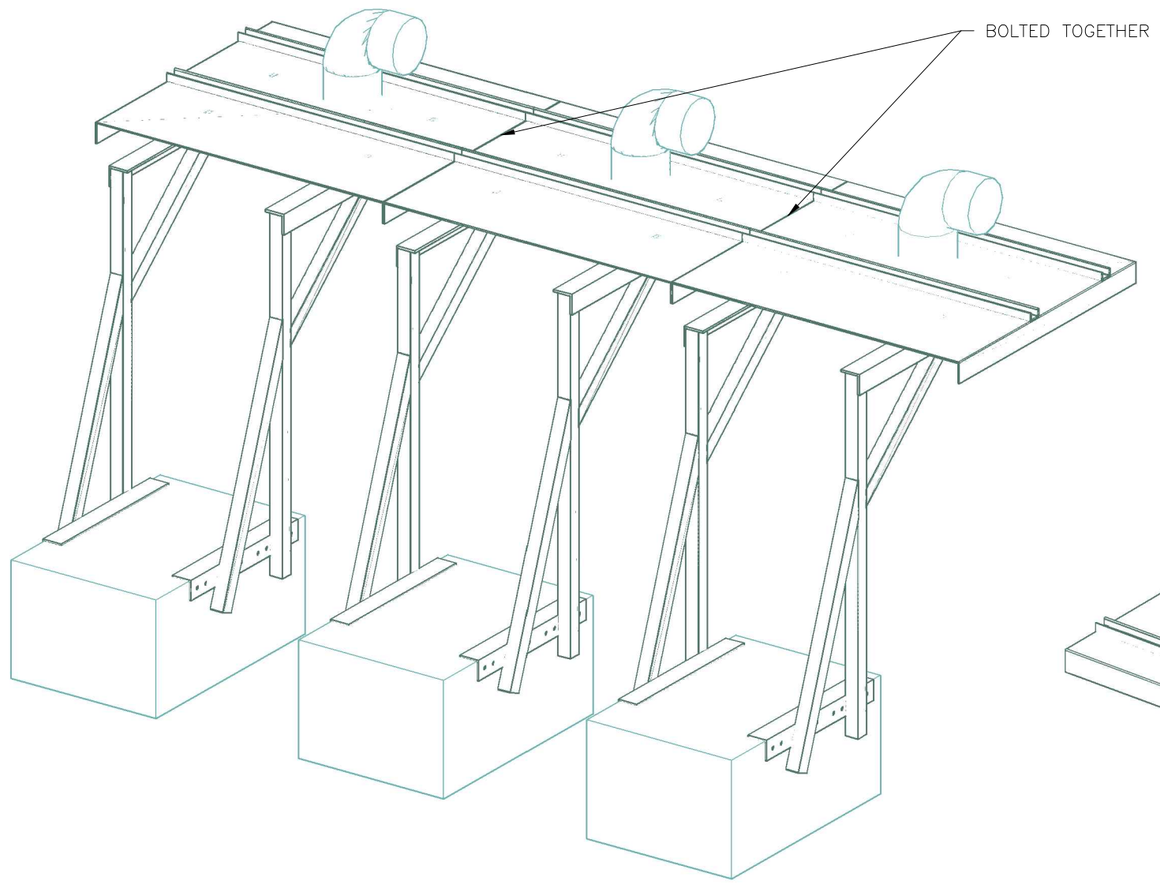

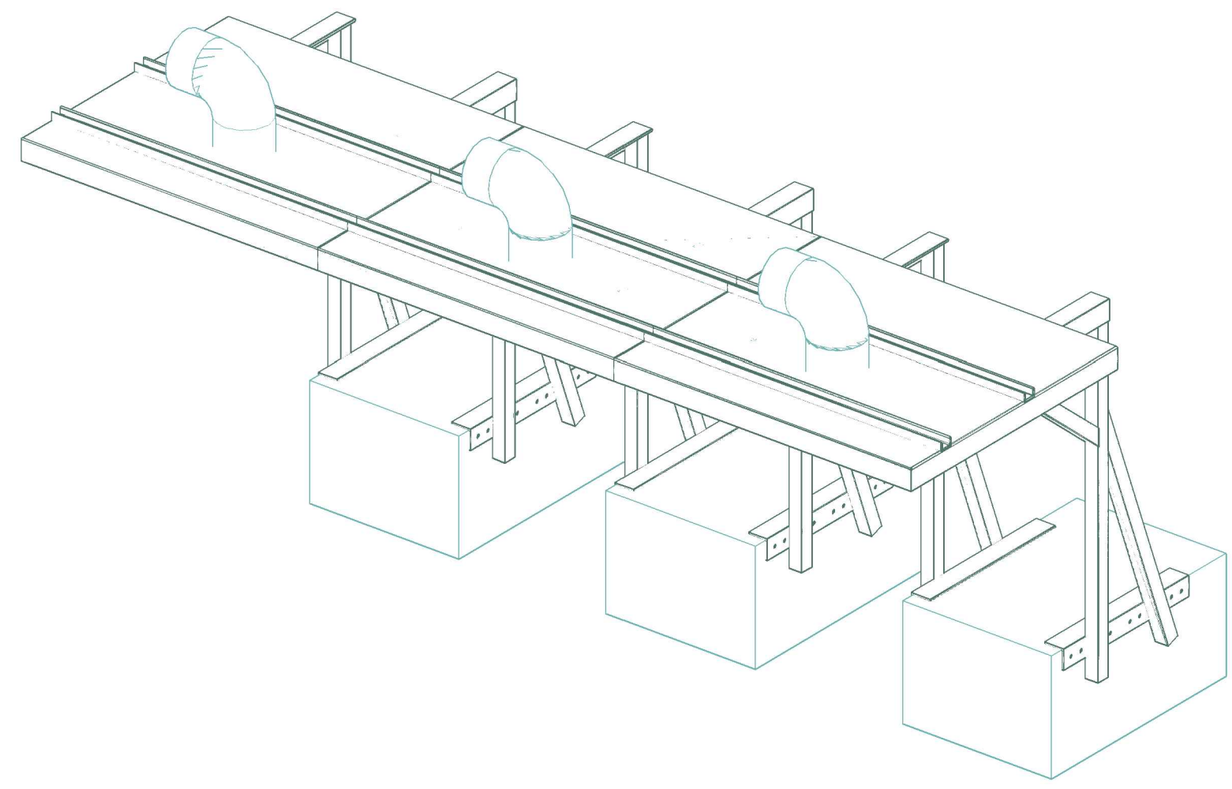

CONFIDENTIAL

THIS DRAWING IS THE PROPERTY OF AIR PRODUCTS AND CHEMICALS, INC. AND MUST BE ACCOUNTED FOR AND RETURNED TO THE COMPANY. INFORMATION HEREIN IS CONFIDENTIAL AND MUST NOT BE USED, COPIED, REPRODUCED, DUPLICATED, DISCLOSED TO OTHERS IN WHOLE OR IN PART, OR SENT OUTSIDE THE COMPANY WITHOUT PROPER AUTHORIZATION.

TOLERANCES UNLESS OTHERWISE SPECIFIED
LINEAR ±1/16" [1.5mm]
ANGLE ±0.5°
HOLE LOCATION ±1/32" [1mm]
HOLE SIZE ±1/32" [1mm]

THIRD ANGLE PROJECTION

WEIGHT:

REV	CN NO.	REVISION DESCRIPTION	DATE	BY	CHK'D	APP'D
0		INITIAL RELEASE	07/08/15	AJT		

AIR PRODUCTS
Air Products and Chemicals Inc.
Wilkes Barre, Pennsylvania

TITLE:
LONG SEAM WELD HOOD CONCEPT

USED ON:
OWNER GROUP:
REFERENCE:
DOC. NO. T-01433
SCALE: NA
SHEET 2 OF 1