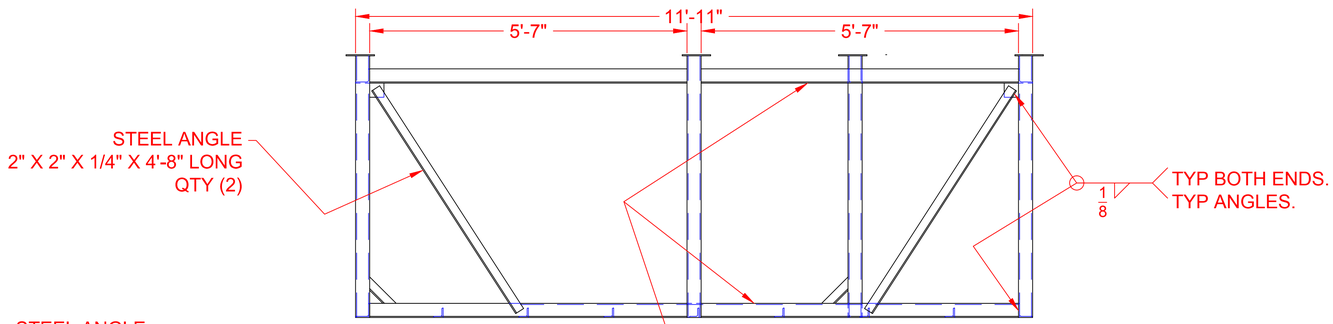

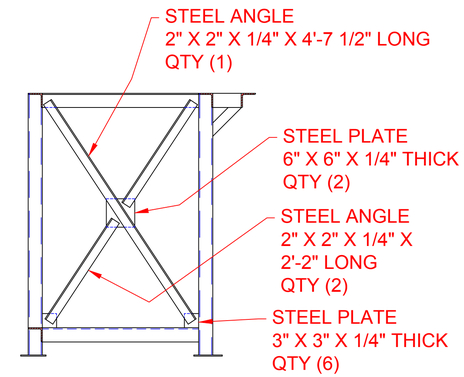

PLATFORM SECTION (B 2|2)
(SCALE 3/4"=1'-0")

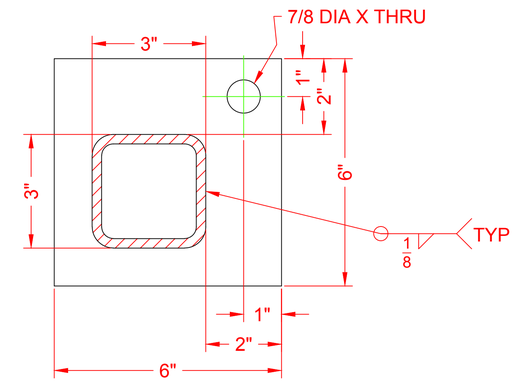

TYP VIEW OF FOOT (C 2|2)
(SCALE 1 1/2"=1'-0")

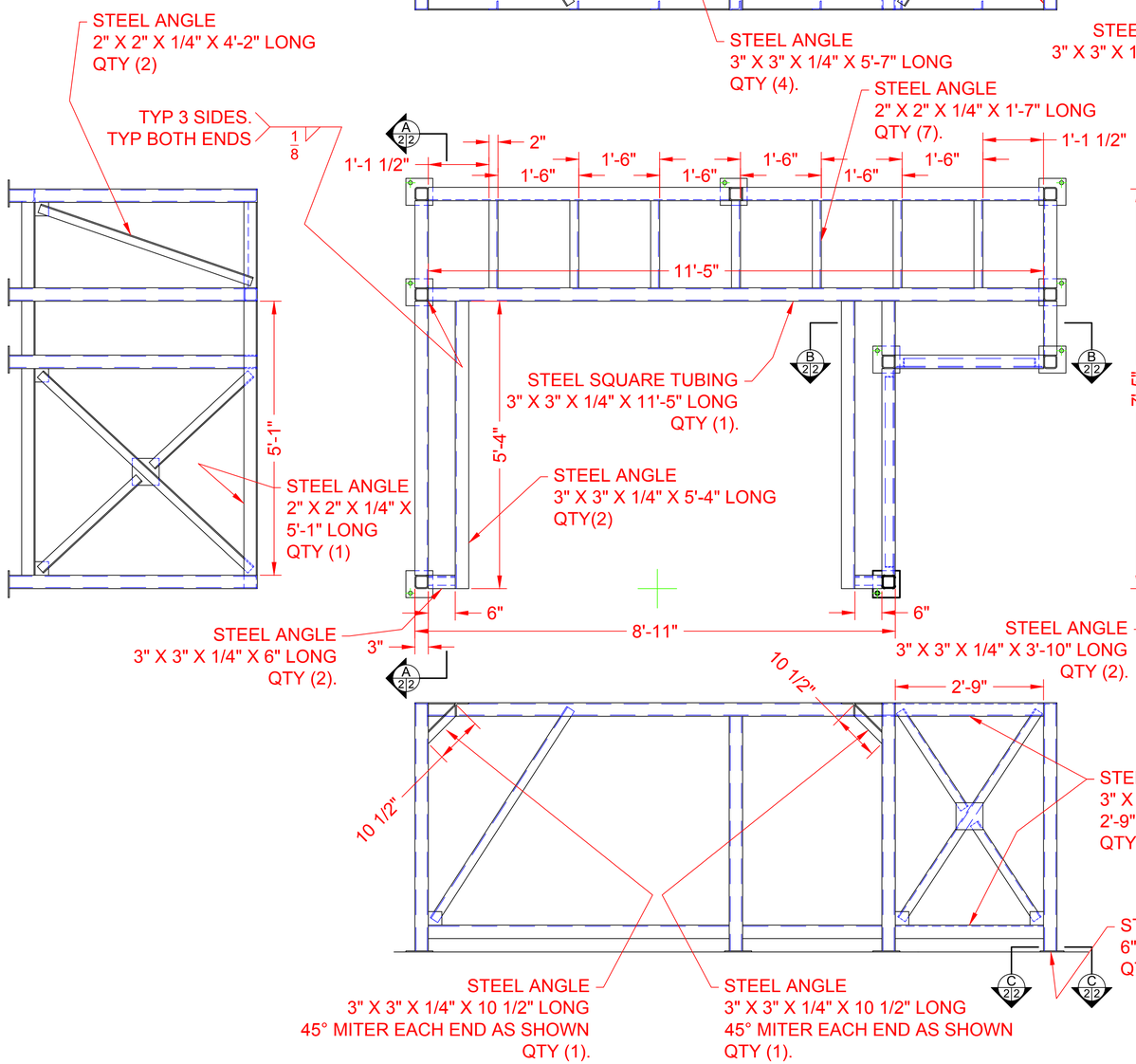

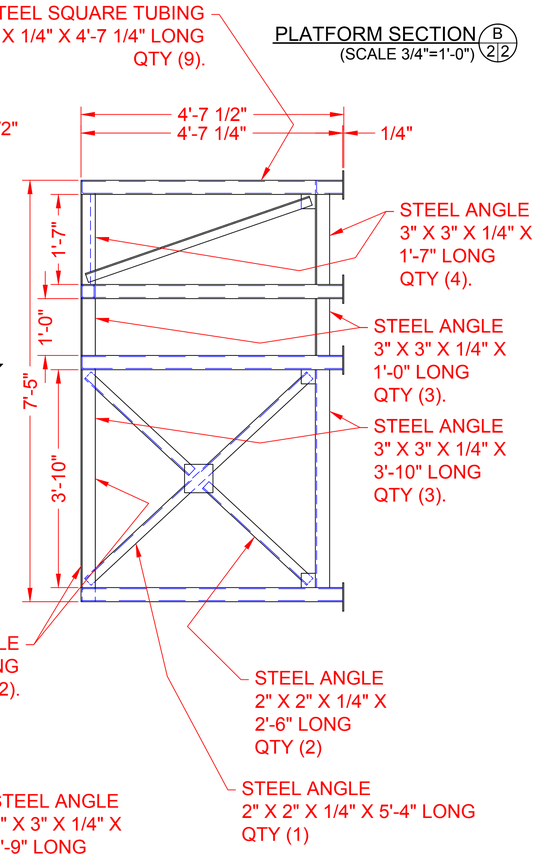

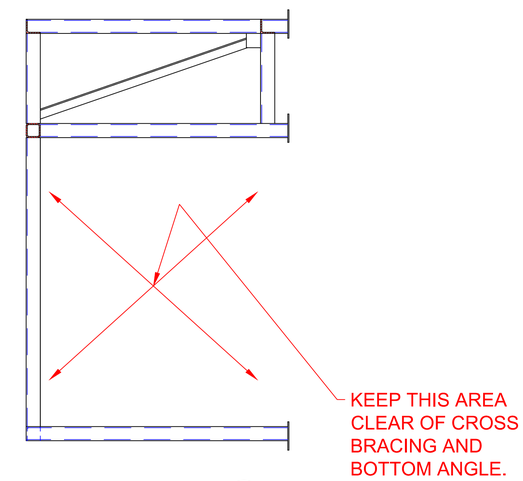

PLATFORM SECTION (A 2|2)
(SCALE 3/4"=1'-0")

1 PLATFORM FRAME

PRELIMINARY
NOT FOR
CONSTRUCTION

SHEET 2

REF	EQUIPMENT LAYOUT	EQUIPA
3	PLATFORM DETAILS	41D701
2	PLATFORM FRAME FAB	41D701
1	PLATFORM ARRANGEMENT	41D701
SHT	DESCRIPTION	DWG NUMBER

S.S.O.
JOB
MAT'L
REVISION

PLANT ENGINEERING
GENERAL ELECTRIC COMPANY
ERIE PLANT

BLDG 2 BAY D SEC 34
MOTOR ASSEMBLY WELD AREA

FAB: PLATFORM FRAME

SCALE 3/4"=1'-0" (16) | DRWN R L Roberts | DATE DEC 07, 2012 | REV | DATE
APPROVED | CHECKED | ENGINEER
PLTSCL .0625 | DRAWING NUMBER 41D701 | SH NO 2 | CONT ON 3 | REV

" THE INFORMATION CONTAINED IN OR OTHERWISE INCLUDED WITH OR ATTACHED TO THIS MESSAGE, TO THE EXTENT IT IS NON-PUBLIC, IS THE CONFIDENTIAL, PROPRIETARY INFORMATION OF THE GENERAL ELECTRIC COMPANY AND, IN ADDITION TO ANY RESTRICTIONS THAT MAY APPLY PURSUANT TO THE TERMS OF ANY CONFIDENTIALITY OR NON-DISCLOSURE AGREEMENTS BETWEEN GE AND THE RECIPIENT (OR THE RECIPIENT'S EMPLOYER), MAY NOT BE USED BY THE RECIPIENT, FOR OTHER THAN THE INTENDED PURPOSE FOR WHICH IT WAS PROVIDED TO THE RECIPIENT, WITHOUT THE PRIOR WRITTEN APPROVAL OF GE."