Absolent Ductwork Layout

Plan View

Bill of materials:
A=12" dia. 2000mm tube
B=12" dia. 1000mm slip tube
C=10" dia. 500mm tube
D=10" dia. 500mm slip tube
E=8" dia. 2000mm tube
F=8" dia. 1000mm slip tube
G=6" dia. 1000mm tube
H=6" dia. 1000mm slip tube
I=6" dia. 500mm tube
J=6" dia. 500mm slip tube
K=6" dia. 90 deg elbow
l=6" dia. 2000mm tube

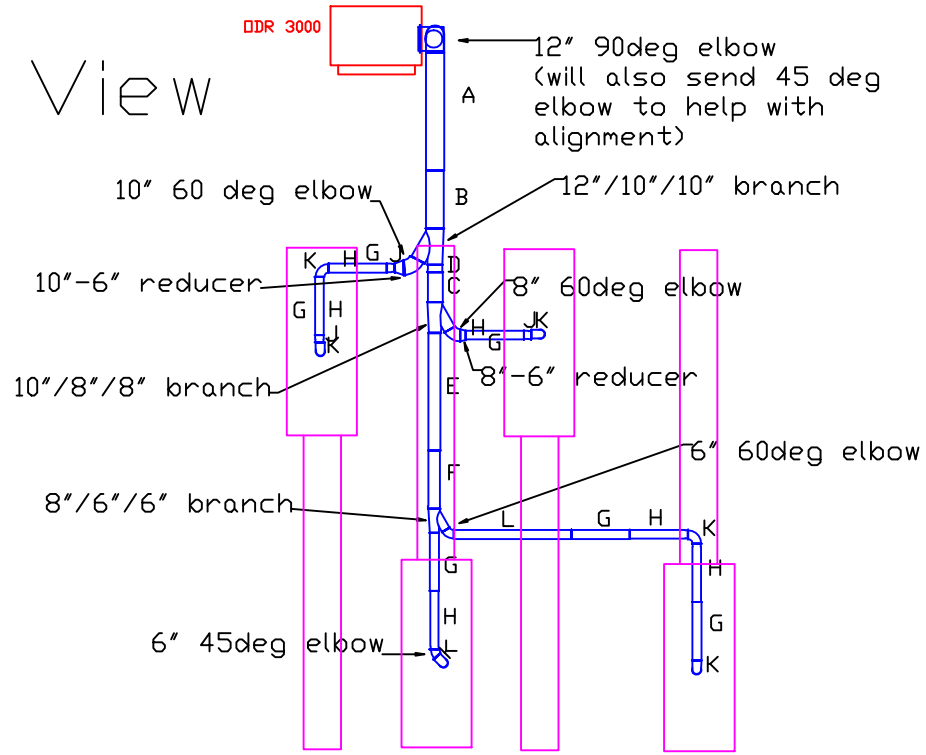

Side View

Typical Drop

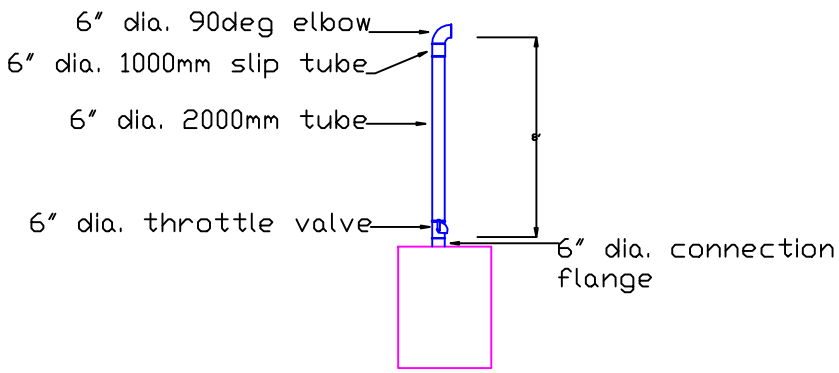

Absolent Connection

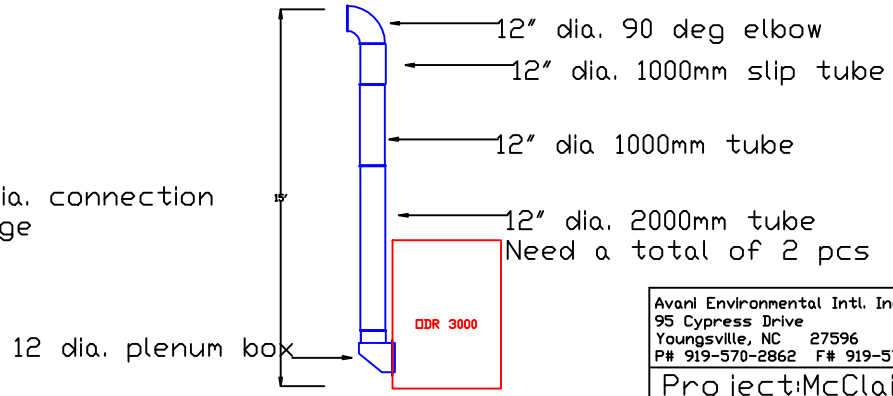

Avani Environmental Intl. Inc.
95 Cypress Drive
Youngsville, NC 27596
P# 919-570-2862 F# 919-570-2863

Avani

Project: McClain Tools	
Drawing: Miyano Project	
Date: 6/21/12	Drawn by: RAV
Sheet No:	