PARTS LIST

QTY:	ITEM DESRIPTION:
3	DF-2000 UNITS
3	8" DIA. FIRE DAMPER
3	8" DIA. ADJ. FLANGE
3	8" DIA. BUTTERFLY VALVE
8	8" DIA. NIPPLE
10	8" DIA. 90° ELBOW
40	8" UNION CLAMPS
40	8" DIA. CLAMP GASKET
10	O-RINGS
16	8" DIA. PIPE
3	8" DIA. PLEMUM BOX

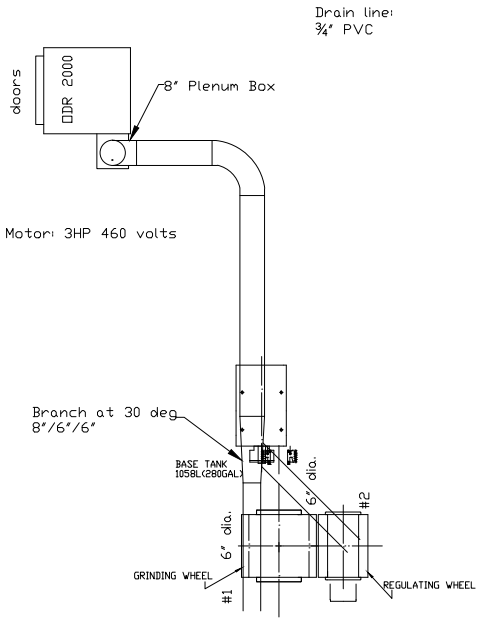

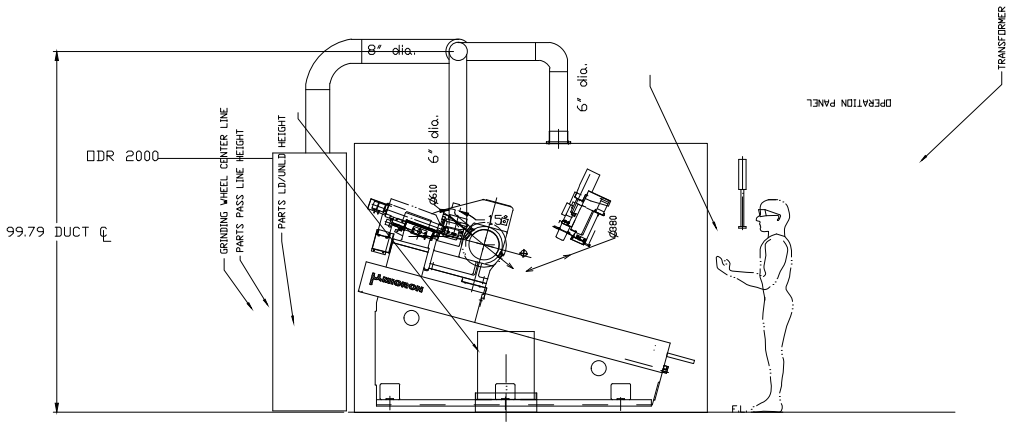

95 Cypress Drive
Youngsville, NC 27596
P# 919-570-2862 F# 919-570-2863

Avani

Project:	
Drawing:	
Date:	Drawn by: J.T.L
Sheet No:	