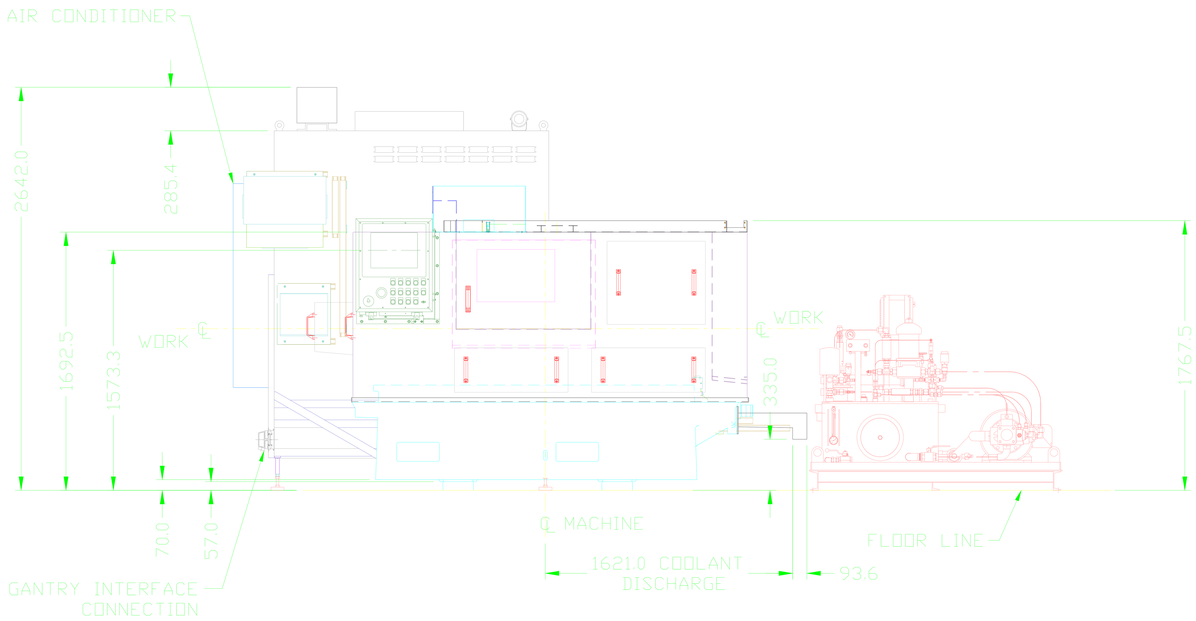

FRONT VIEW

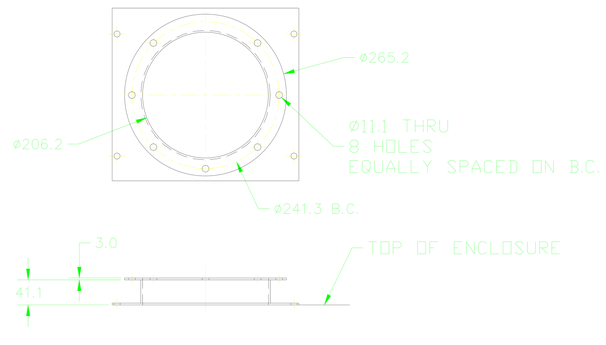

VIEW OF MIST COLLECTION FLANGE
SCALE 1:4

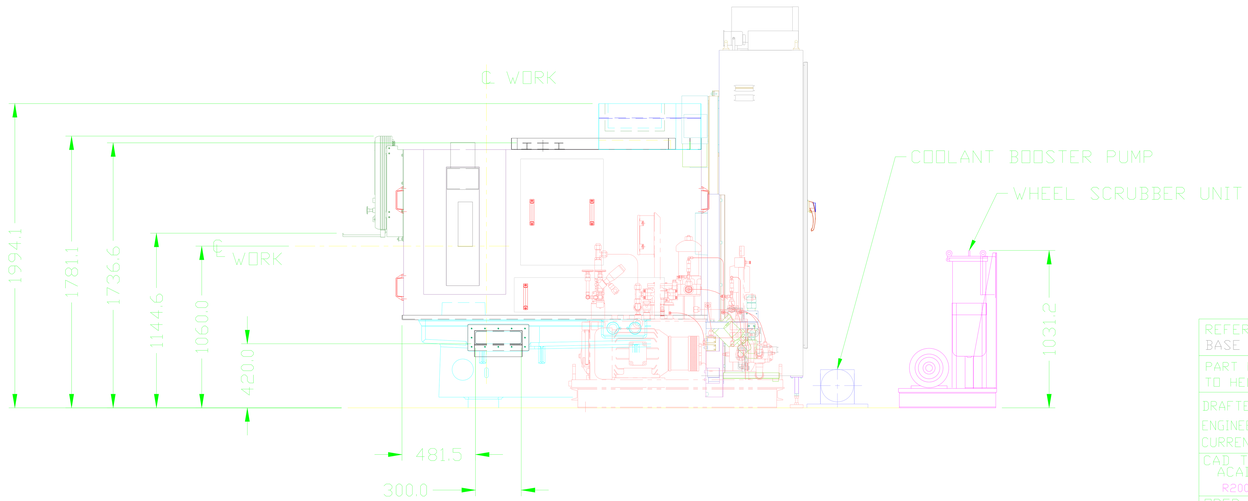

R.H. END VIEW

MIST EXTRACTION REQUIREMENT
MINIMUM OF 425M³/HR

WEIGHTS:
MACHINE ---------- 8,000 KG
HYDRAULIC RESERVOIR --- 300 KG
SCRUBBER UNIT --------- 225 KG
BOOSTER PUMP --------- ??? KG

AIR:
PRESSURE ---------- 4-6 BAR

COOLANT:
CUSTOMER CENTRAL SYSTEM TO SUPPLY:
COOLANT REQUIREMENT 200 L/Min AT A PRESSURE OF 2-4 BAR, FILTERED TO 20 MICRONS, COOLANT TEMPERATURE AMBIENT, BUT HELD TO ±3°C CHANGE PER HOUR AT A MAX TEMP OF 30°C

LTRS	REVISIONS		
ORIGINATOR	CHECKER	ENGR APP	MATL APP
—	–		

AMT.	SYM.	SHT.	NAME OR STOCK SIZE	MATERIAL

REFERENCE
BASE PART NO.: SEE CHART

PART MUST COMPLY WITH MATERIAL SPECIFICATION WSS-M99P9999-A1 TO HELP SAFEGAURD HEALTH, SAFETY AND THE ENVIRONMENT.

DRAFTED IN ACCORDANCE WITH FORD ENGINEERING CAD & DRAFTING STANDARDS CURRENT AT INITIAL RELEASE

3rd ANGLE PROJ
DIMENSIONS IN MILLIMETERS

CAD TYPE	CAD LOC.	CAD FILE	DATA
ACAD R2004	N/A	Not Applicable	IS MASTER
OPER NO. 070	UNIT I40002	DRAWING 004ZE-1238-10125	

STA. NO.	DES. BY	DET. BY	TITLE	SHT 002 OF 002
–	SMC	SMC	ERECTING PLAN	
DEPT NO. I410	CHECKED –	SAFETY	TO FINISH GRIND BALANCE GEAR DIAMETER INCLUDING CHAMFER. –	
	SCALE 1:20	DATE 20081008	DIVISION POWERTRAIN	
			PLANT CHEP CHIHUAHUA L079A	

FORD BASE PART NO.
3L5G-6303-DC
8E5G-6303-AD

DO NOT SCALE DRAWING

SHEET SIZE A1

Ford Motor Company

VENDOR JOB NO. LT9450032
PO NO. 867 2008 1904234

VENDOR NAME CINETIC LANDIS CORP.
VENDOR DRAWING NO. LT9450032-000-B