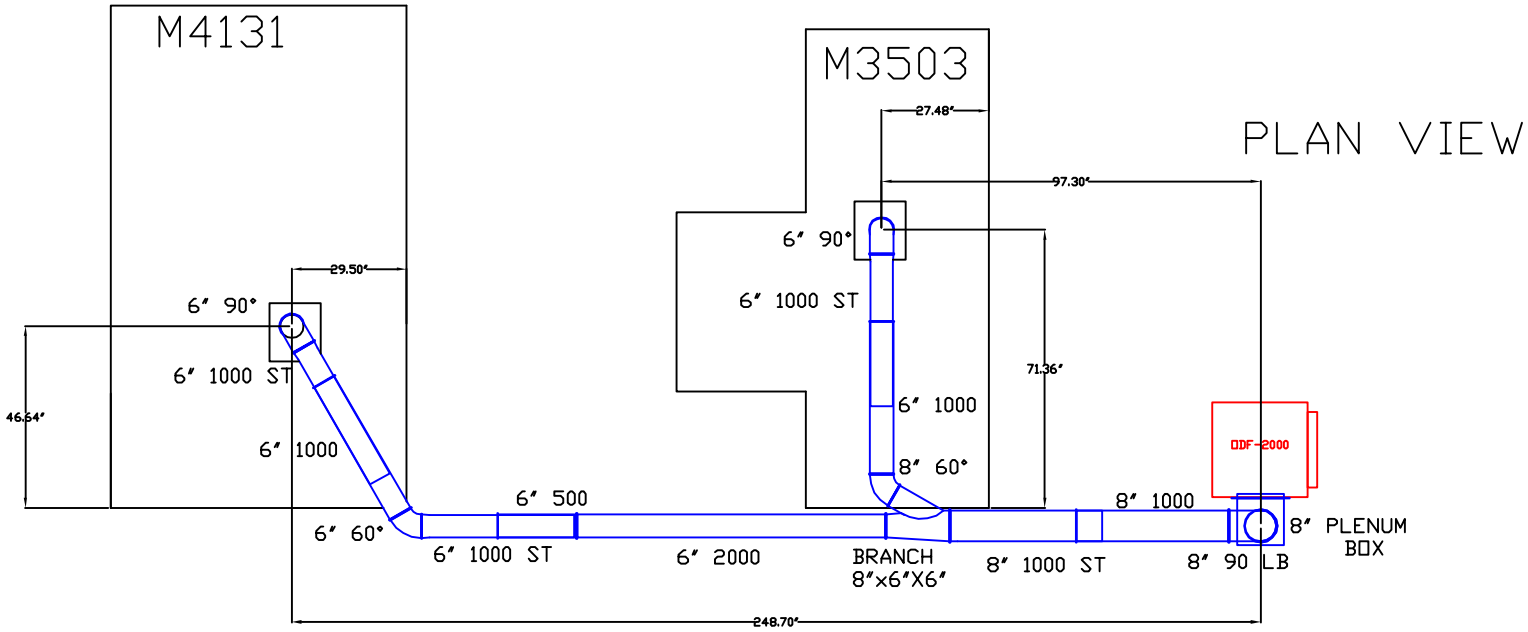

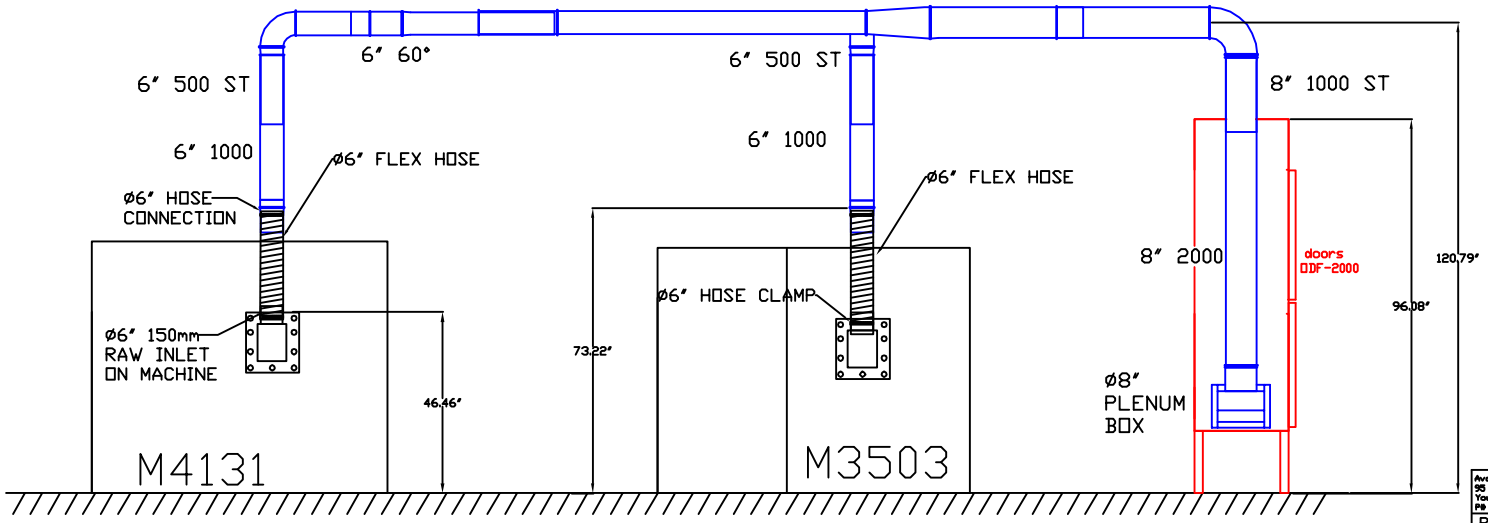

ELEVATION

Avani Environmental Intl. Inc.
95 Cypress Drive
Youngsville, NC 27596
PH 919-570-2862 FX 919-570-2863

Avani

Project: DDR-2000 -M3503 & M4131
Drawing: Layout and Plan View
Date: 09-14-12 Drawn by: J.T.L
Sheet No: 1 OF 1

This document was created with Win2PDF available at http://www.win2pdf.com.
The unregistered version of Win2PDF is for evaluation or non-commercial use only.
This page will not be added after purchasing Win2PDF.