Hardware Bag A :
adjacence of the top hood draft (back part) and upper part of the backdraft module:
hex screw 5/16"*3/4"*44pcs
flat washer ODφ23*2t*44pcs

Hardware Bag B :
left and right back panel:
hex screw 3/8"*5"*55pcs
flat washer ODφ28*3T*110pcs
hex nut*55pcs

Hardware Bag C :
for fastening (2) arm 2040:
hex screw 5/16"*1"*16pcs
flat washer ODφ23*2t*16pcs

Hardware Bag D :
adjacence of the side panels:
hex screw 3/8"*5"*32pcs
flat washer ODφ28*3T*64pcs
hex nut*32pcs

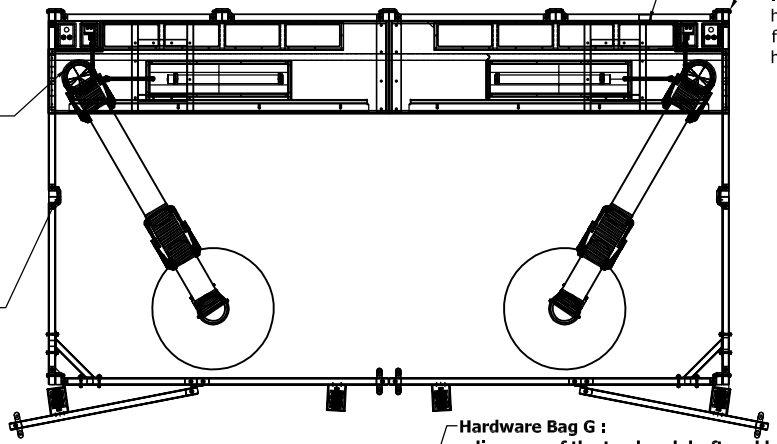

Hardware Bag G :
adjacence of the top hood draft and back panels:
hex screw 3/8"*3/4"*32pcs
lock washer*32pcs
flat washer ODφ28*3t*32pcs

Hardware Bag H :
M16 lifting hanger*4pcs

Hardware Bag I :
backdraft module to back panels:
hex screw 3/8"*3/4"*32pcs
lock washer*32pcs
flat washer ODφ28*3t*32pcs

Hardware Bag E :
corner gussets under open shelf:
hex screw 3/8"*3/4"*64pcs
flat washer ODφ28*3t*64pcs

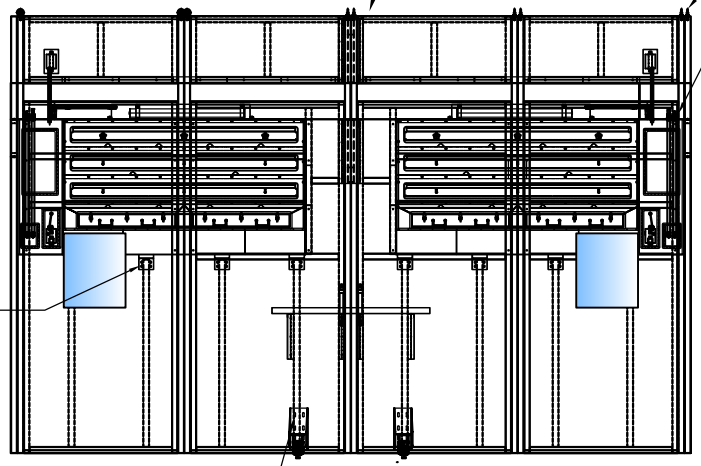

Hardware Bag F :
swing out doors with casters:
hex screw 3/8"*3-1/2"*16pcs
lock washer*16pcs
flat washer ODφ28*3t*32pcs
hex nut*16pcs

Hardware Bag K :
adjacence of top hood draft and side panel SL-1/SR-1:
hex screw 3/8"*3/4"*8pcs
flat washer ODφ28*3t*8pcs

Hardware Bag J :
corner gussets:
cap screw M16*80L
hex nut*16pcs
flat washer*32pcs

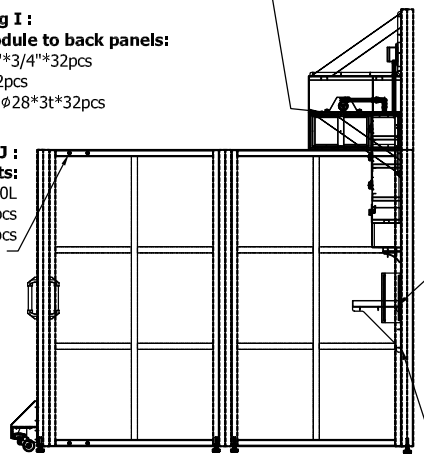

Hardware Bag L :
adjacence of the CO2 bracket and gussets:
phillips head screw 3/8"*3/4"*12pcs
flat washer ODφ28*3t*12pcs
hex nut*12pcs

Hardware Bag M :
CO2 bracket gusset to the back panel:
hex screw 3/8"*3/4"*12pcs
flat washer ODφ28*3t*12pcs