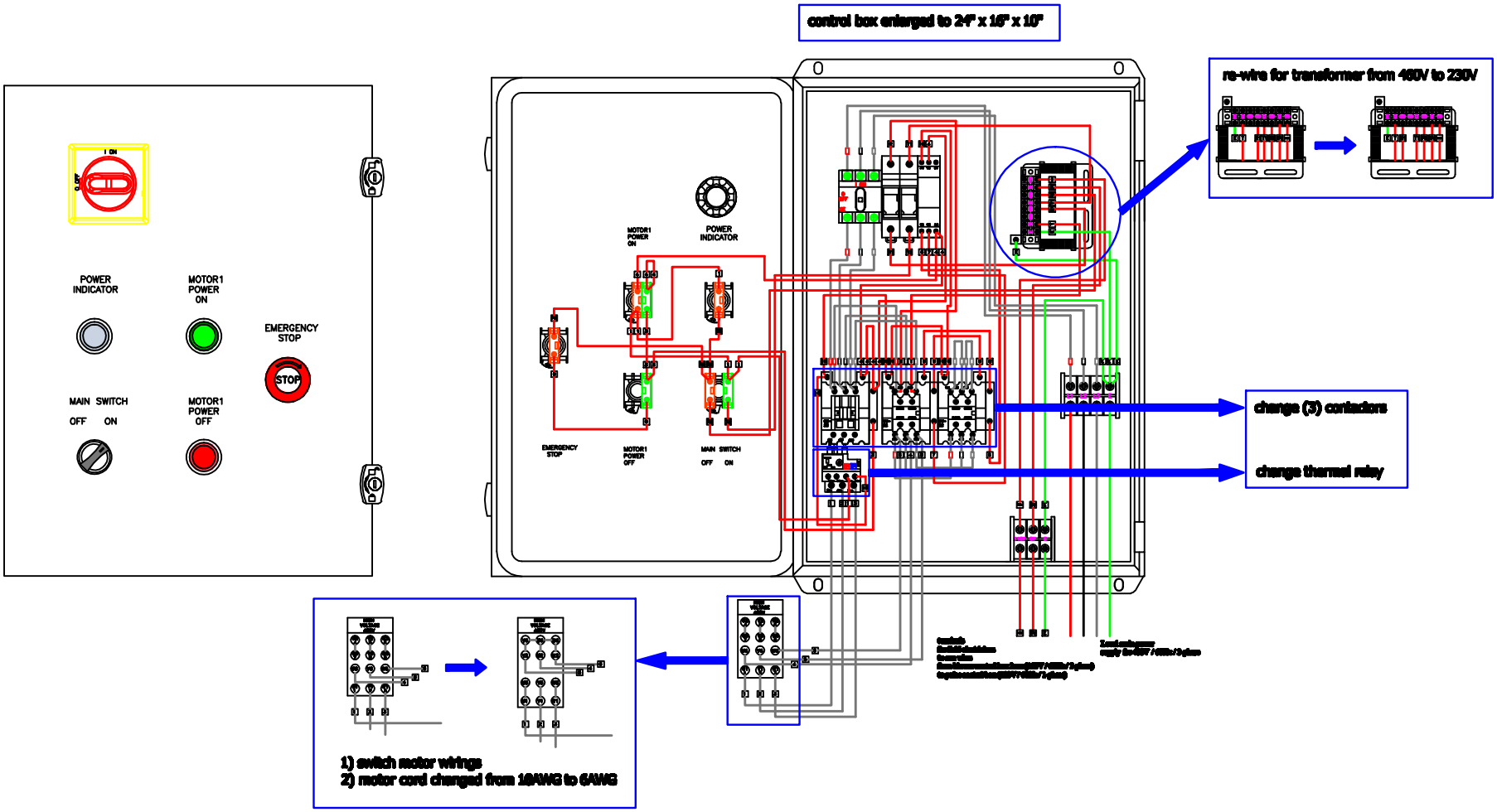
control box enlarged to 24" x 16" x 10"
re-wire for transformer from 460V to 230V
change (3) contactors
change thermal relay
1) switch motor wirings
2) motor cord changed from 10AWG to 6AWG
POWER INDICATOR
MOTOR1 POWER ON
EMERGENCY STOP
STOP
MAIN SWITCH
OFF ON
MOTOR1 POWER OFF