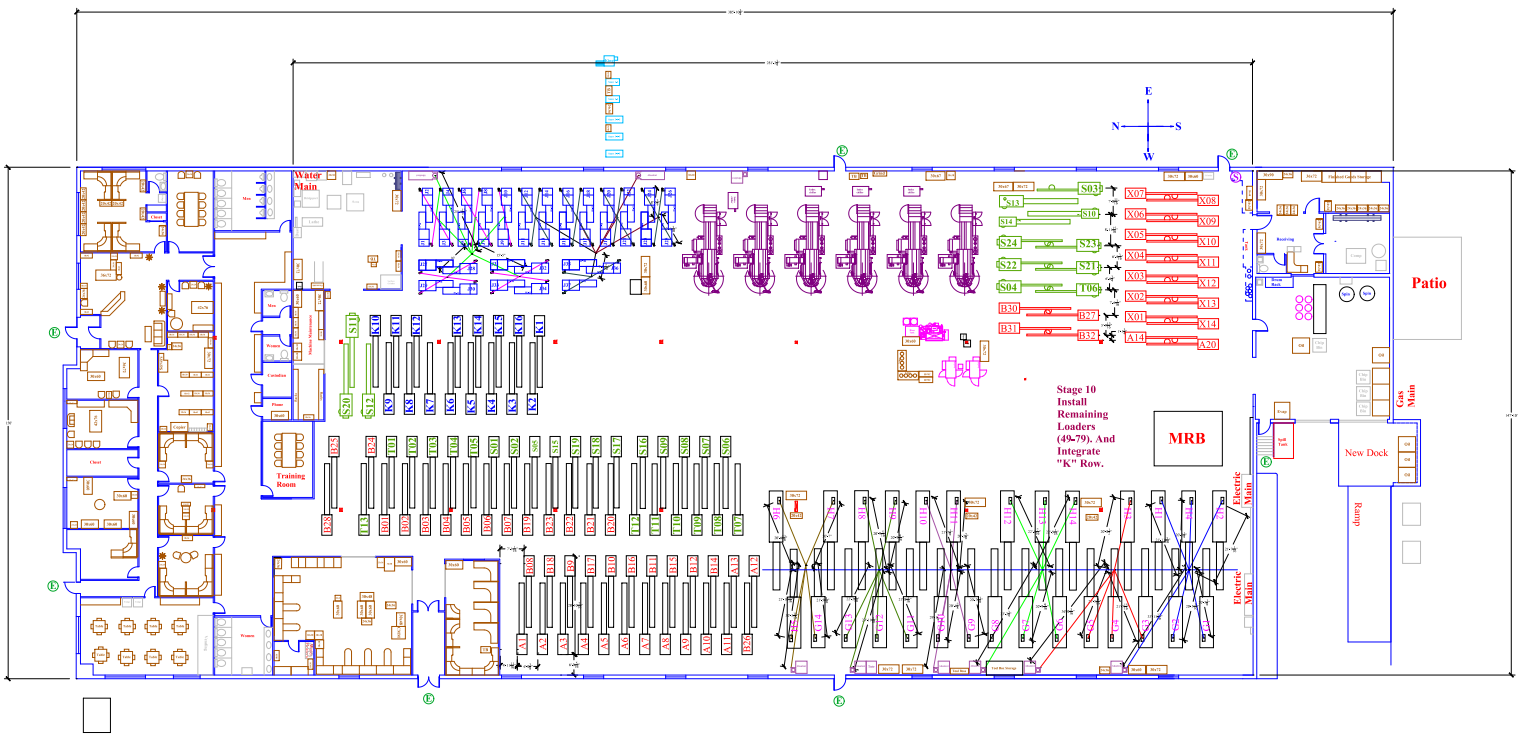
Water Main
Training Room
Stage 10 Install Remaining Loaders (49-79). And Integrate "K" Row.
MRB
Patio
New Dock
Ramp
Gas Main
Electric Main
Electric Main
E
N
S
W

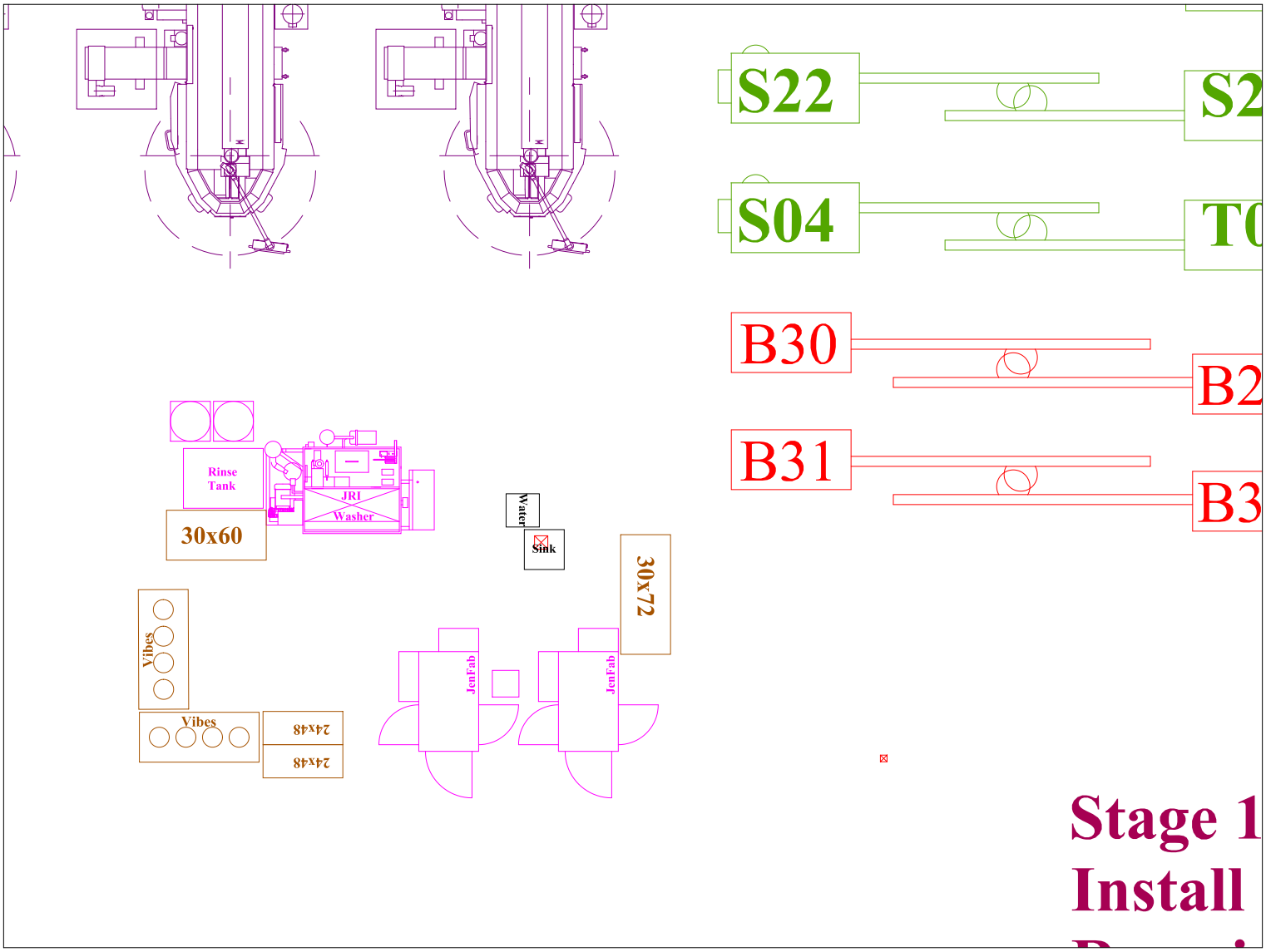
S22
S2
S04
T0
B30
B2
B31
B3
Rinse Tank
JRI Washer
30x60
Water
Sink
30x72
Vibes
Vibes
24x48
24x48
JenFab
JenFab
Stage 1
Install

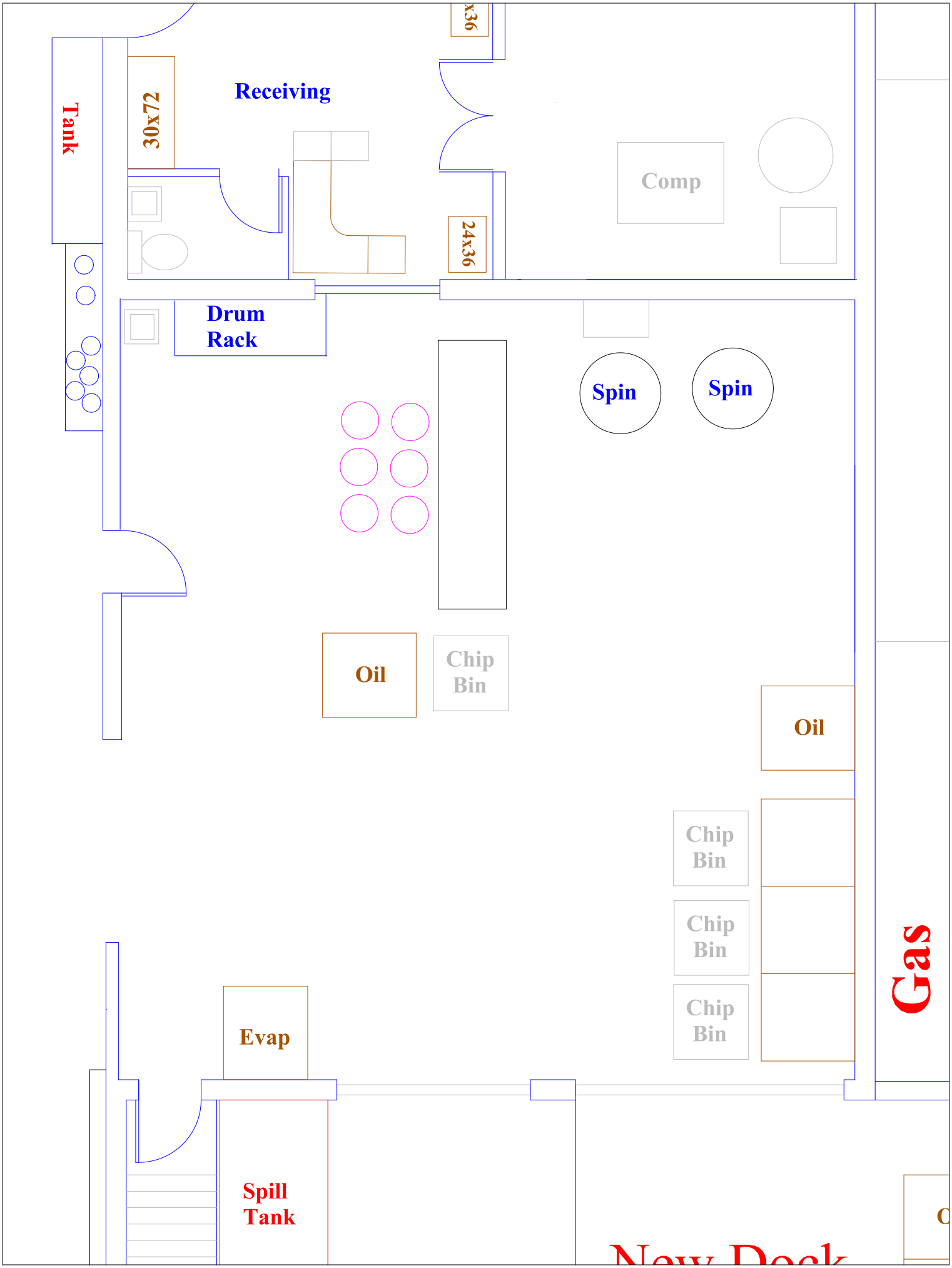
Tank
30x72
Receiving
x36
24x36
Comp
Drum
Rack
Spin
Spin
Oil
Chip
Bin
Oil
Chip
Bin
Chip
Bin
Chip
Bin
Gas
Evap
Spill
Tank
New Dock

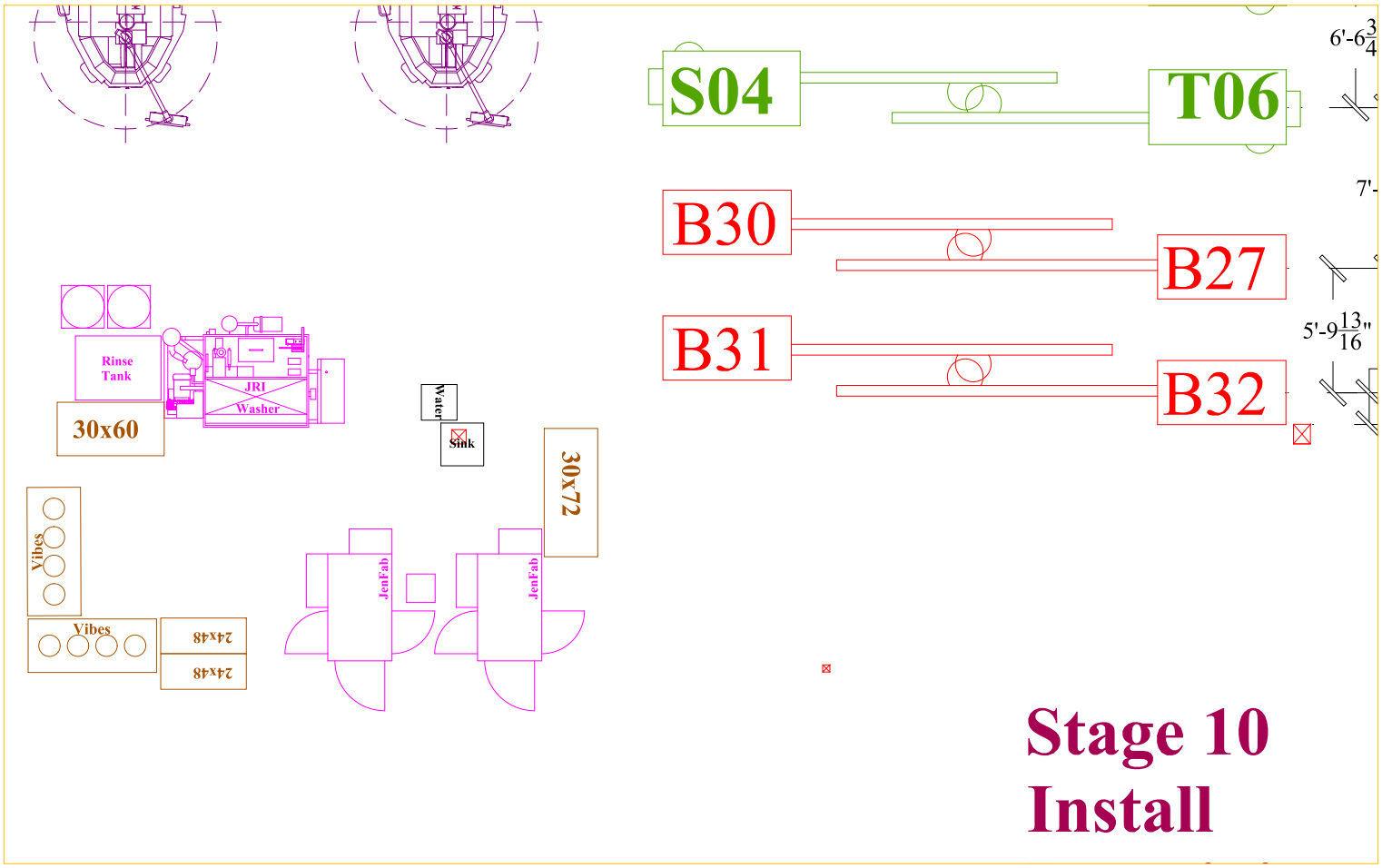

Stage 10 Install

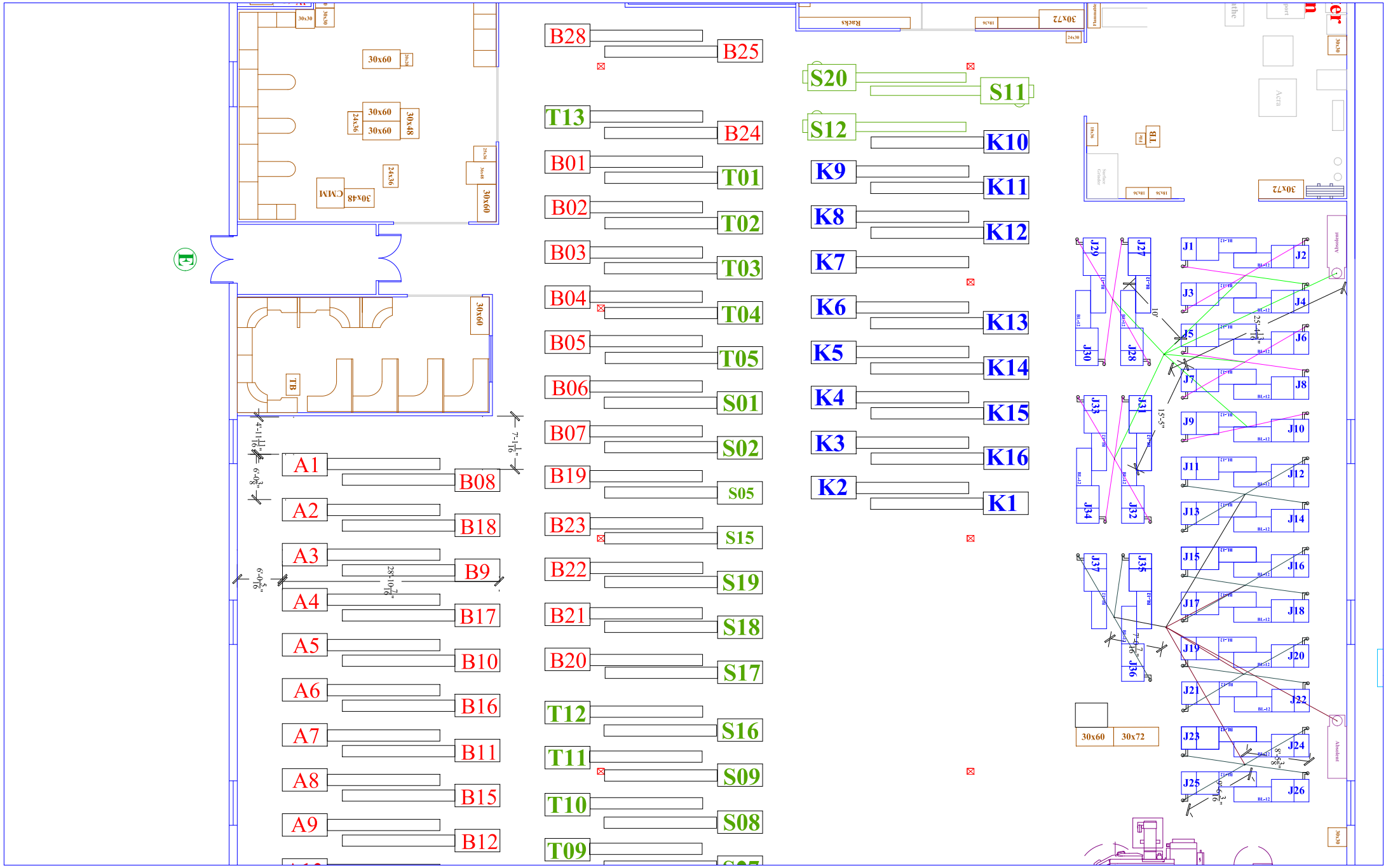
B28
B25
S20
S11
T13
B24
S12
K10
B01
T01
K9
K11
B02
T02
K8
K12
B03
T03
K7
B04
T04
K6
K13
B05
T05
K5
K14
B06
S01
K4
K15
B07
S02
K3
K16
B19
S05
K2
K1
B23
S15
B22
S19
B21
S18
B20
S17
T12
S16
T11
S09
T10
S08
T09
A1
B08
A2
B18
A3
B9
A4
B17
A5
B10
A6
B16
A7
B11
A8
B15
A9
B12
30x60
30x48
24x36
CMM
TB
Racks
30x72
18x36
Acra
J1
J2
J3
J4
J5
J6
J7
J8
J9
J10
J11
J12
J13
J14
J15
J16
J17
J18
J19
J20
J21
J22
J23
J24
J25
J26
J27
J28
J29
J30
J31
J32
J33
J34
J35
J36
J37
Absolent
30x30

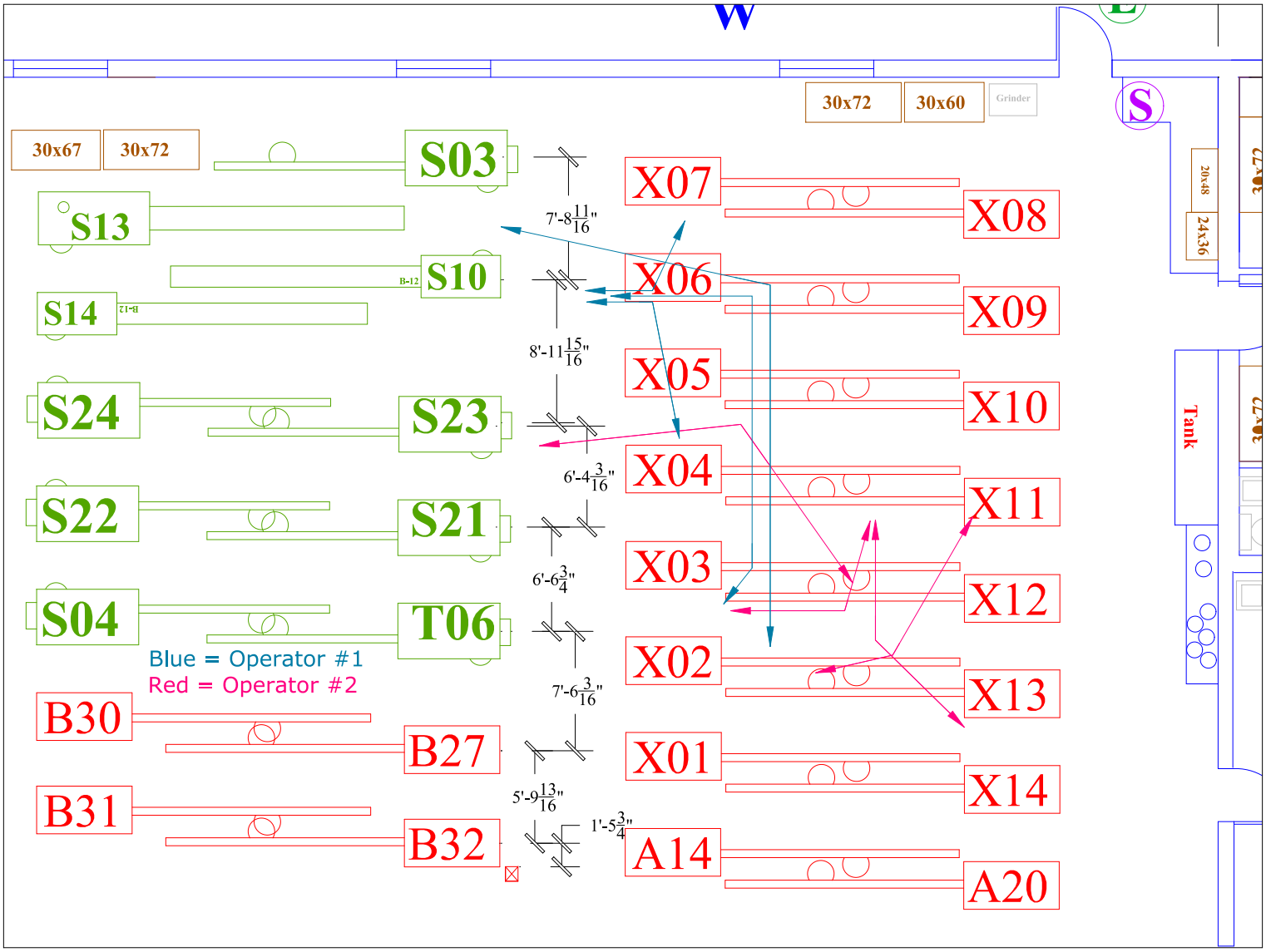
W
S
30x72
30x60
Grinder
30x67
30x72
S03
S13
S10
B-12
S14
B-12
S24
S23
S22
S21
S04
T06
B30
B27
B31
B32
X07
X08
X06
X09
X05
X10
X04
X11
X03
X12
X02
X13
X01
X14
A14
A20
7'-8 11/16"
8'-11 15/16"
6'-4 3/16"
6'-6 3/4"
7'-6 3/16"
5'-9 13/16"
1'-5 3/4"
Blue = Operator #1
Red = Operator #2
20x48
24x36
30x72
Tank
30x72