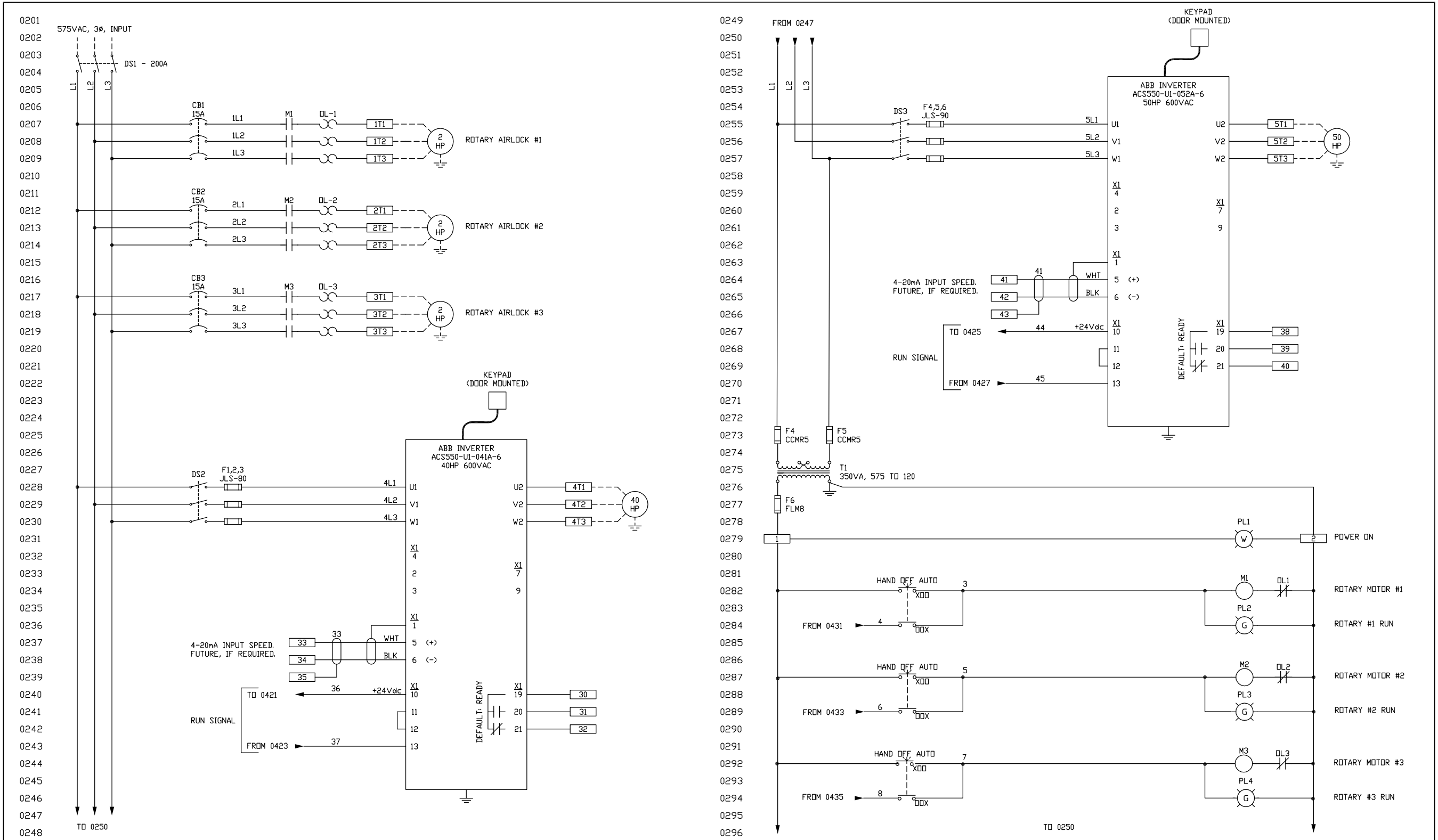

REV	DESCRIPTION	BY	CHK'D	APP'D	DATE

THIS DRAWING IS A PRIVATE AND CONFIDENTIAL COMMUNICATION AND THE PROPERTY OF ESSCO, INCORPORATED. IT MUST NOT BE COPIED OR LENT WITHOUT CONSENT OD ESSCO, INC. AND MUST BE PROMPTLY RETURNED WITH TENDER AND/OR COMPLETION OF ORDER.

ESSCO
ELECTRIC SERVICE & SALES, INC.
1800 Sullivan St.; Greensboro, NC 27405
Tel: (336) 275-5321 Fax: (336) 275-5325
Web site: www.esscoinc.com

DRAWN BY: KB 08/16/07
CHECKED BY:
APPROVED BY:

TITLE DUST COLLECTION CONTROL SYSTEM ELECTRICAL DIAGRAM

SCALE NTS | DRAWING NUMBER 07169I02 | REV. 0 | LAST WIRE