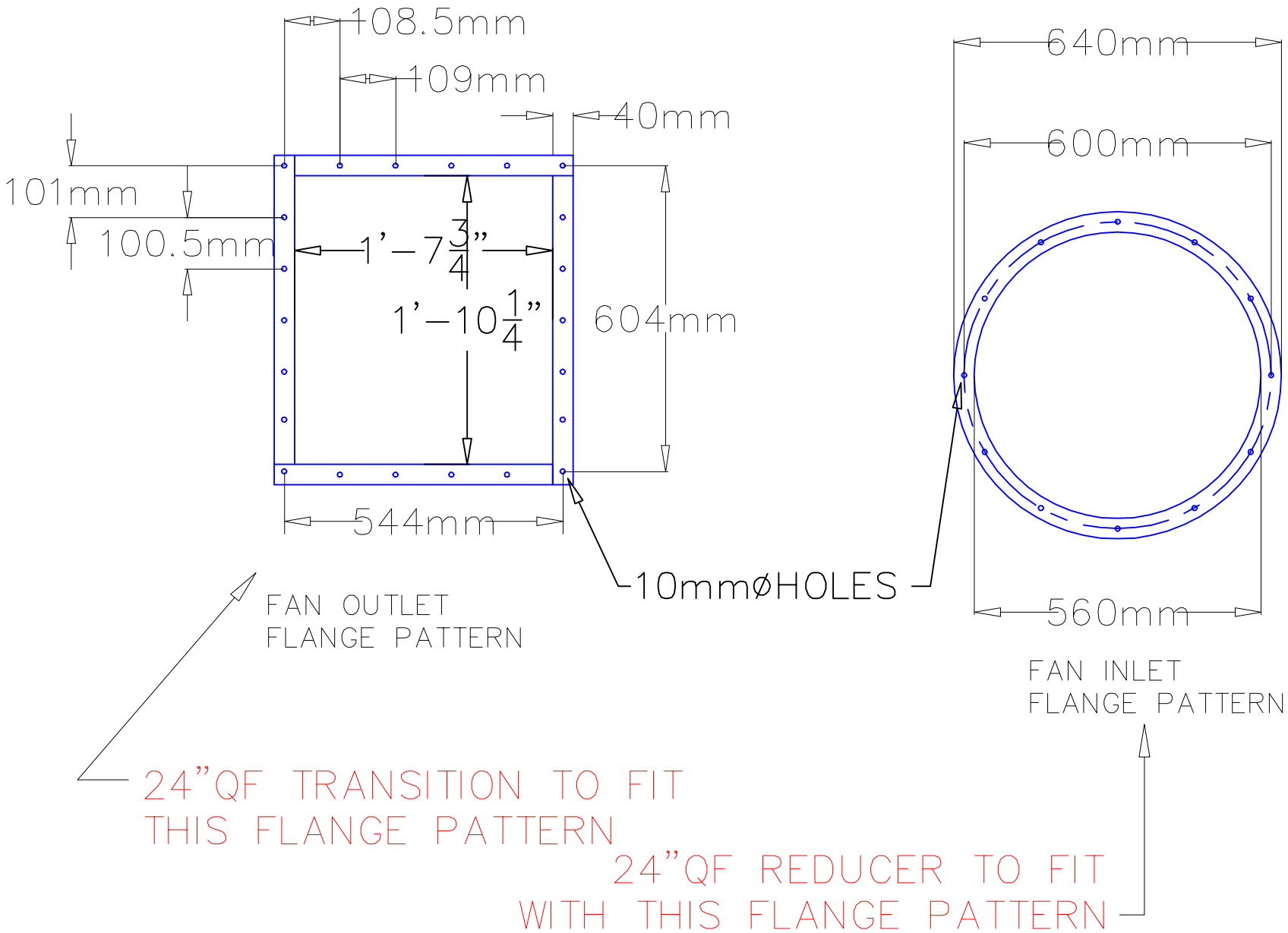

REVISION					
REV.	DATE	BY	IRON MOUNTAIN FAN FLANGES	S56-560 FAN INLET/OUTLET FLANGE DETAILS	SCALE NO SCALE	DRAWN BY C.MORRISON
				CONFIGURATION: G5-A	DATE 10-20-06	CHK'D
					A	DRAWING NO. 0607002-5