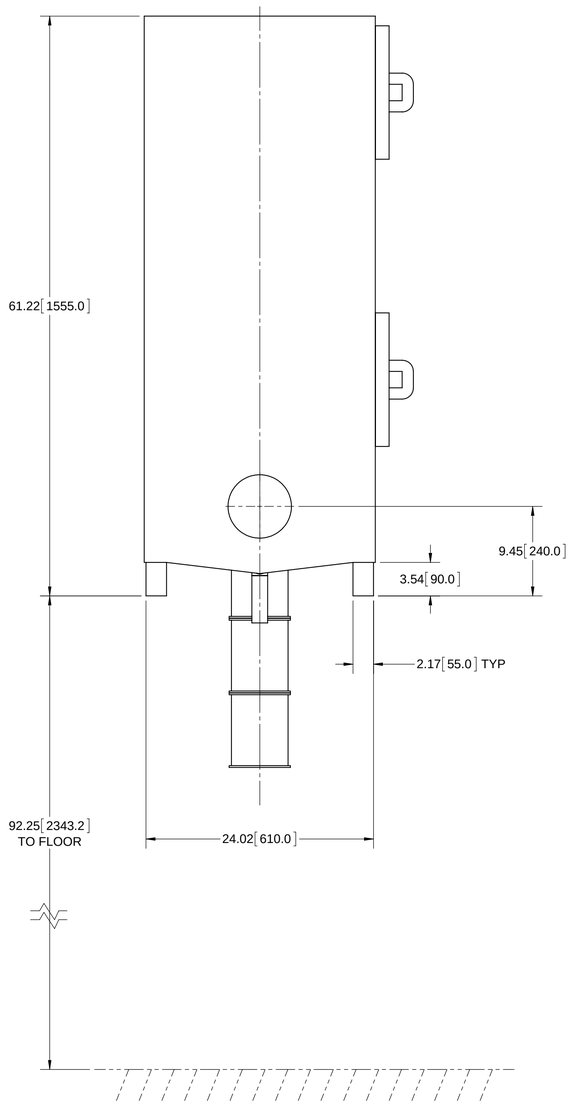

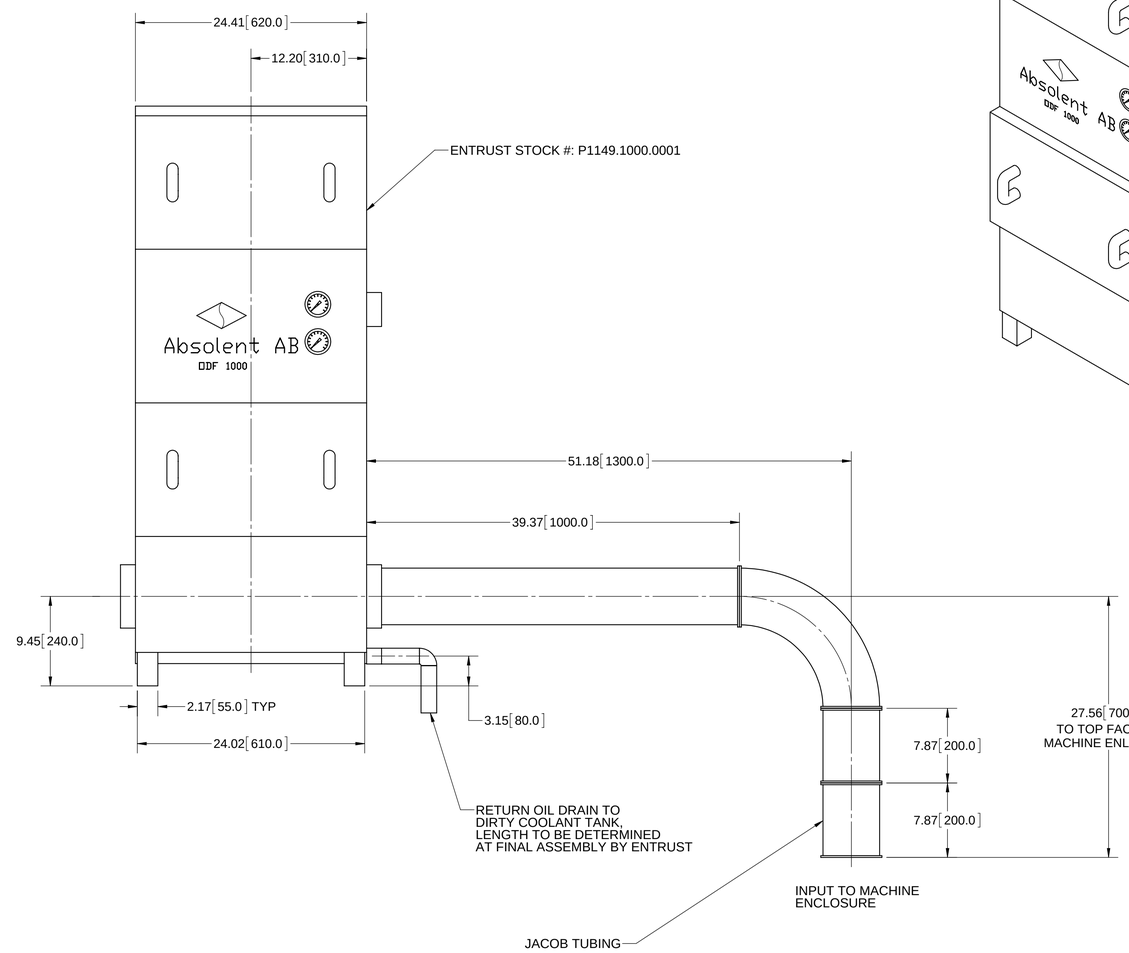

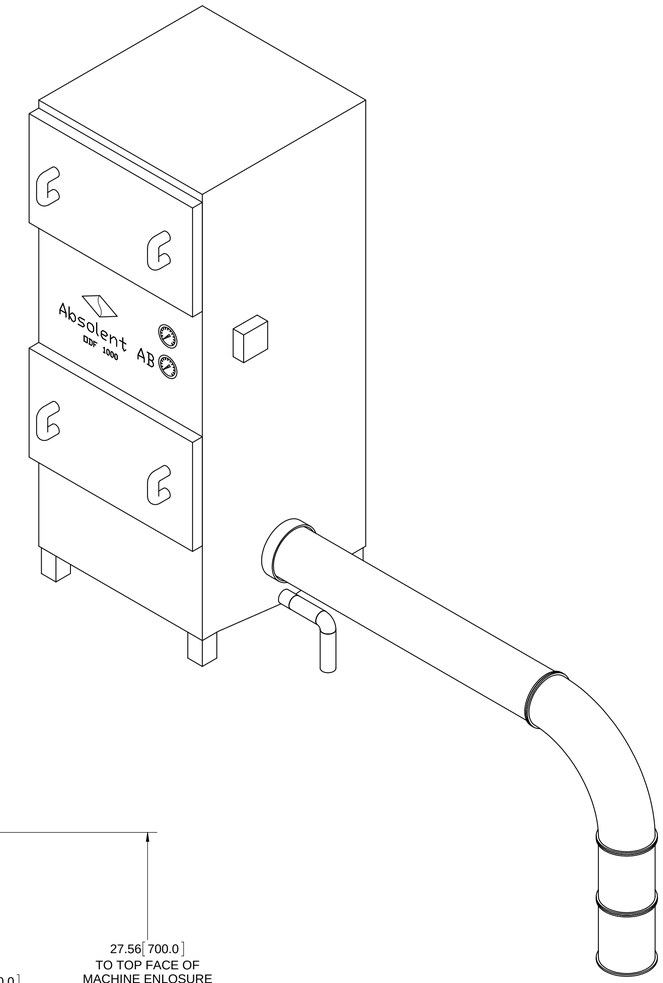

NOTES:

1. ABSOLENT ODF 1000 DIMENSIONS PER ABSOLENT DRAWING #11850101
2. PAINT: RAL 7032 GRAY

UNLESS OTHERWISE SPECIFIED ALL DIMENSIONS ARE inch [mm] UNMARKED TOLERANCES ON DECIMALS X [X] ± .04 [1.0] X.XX [X.X] ± .01 [0.2] X.XXX [X.XX] ± .005 [0.1] X.XXXX [X.XXX] ± .0005 [0.01] ON ANGLES ± 0° 30' ON SURFACE 125 [3.2] BREAK ALL SHARP EDGES DO NOT SCALE DRAWING	DRAWN BY R. WEISTER DATE 8/15/2011 DESIGNED BY R. WEISTER DATE 8/5/2011	**NOTICE** This document is the property of UNISIG and contains proprietary information. The contents may not be disclosed, copied, or circulated except for purposes authorized by UNISIG.	UNISIG a division of **Entrust Tool and Design Co., Inc.** N58 W14630 Shawn Circle Menomonee Falls, Wisconsin 53051
MATERIAL	FINISH PAINT	TITLE MIST COLLECTOR LAYOUT, M1232 MACHINE	SHEET 1 OF 1 SIZE **D**
STOCK SIZE		MACHINE	PART NUMBER / SW -