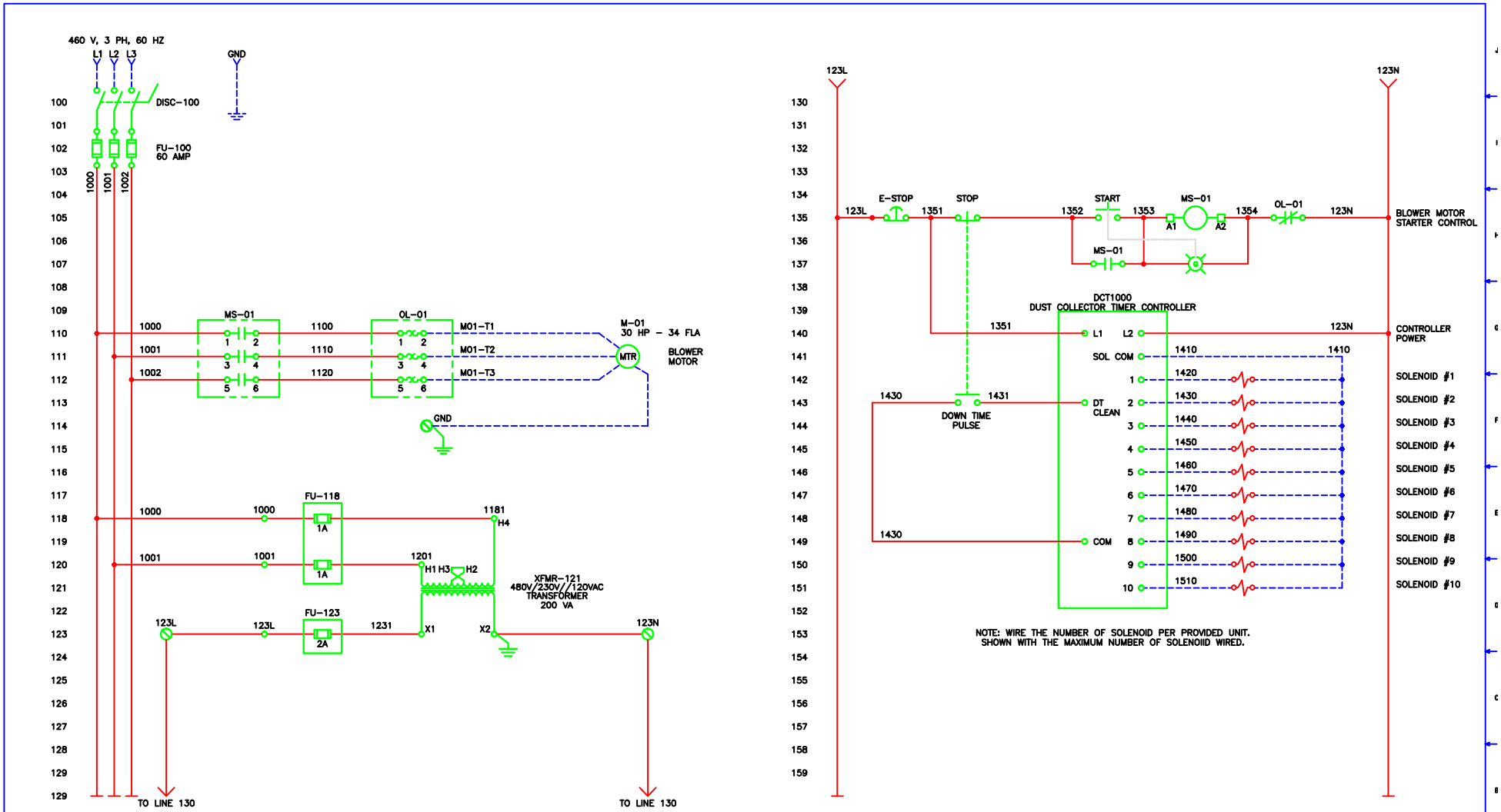

THIS DRAWINGS IS CONFIDENTIAL PROPERTY OF ENGINEERING FIRM
DO NOT DUPLICATE IN AN TYPE WITHOUT PROPER WRITTEN PERMISSION.
IF YOU ARE NOT THE INTENDED CLIENT PLEASE DESTORY THIS DOCUMENT.

REV.	DESCRIPTION	DATE
1	CREATED	7/28/08

DUST COLLECTOR BLOWER PACKAGE 480VAC, 3 PHASE – 30 HP WITH DUST COLLECTOR TIMER CONTROLLER

DRAWN BY: ECS	DATE: 7/28/08	DRAWING SCALE: NONE	CLIENT: AIR CLEANING TECH, INC
CHECKED BY: ECS	DATE: 7/28/08		PROJECT NUMBER

DRAWING NUMBER: 30 HP 100